产品目录 PRODUCT CONTENTS

接线端子专业制造商

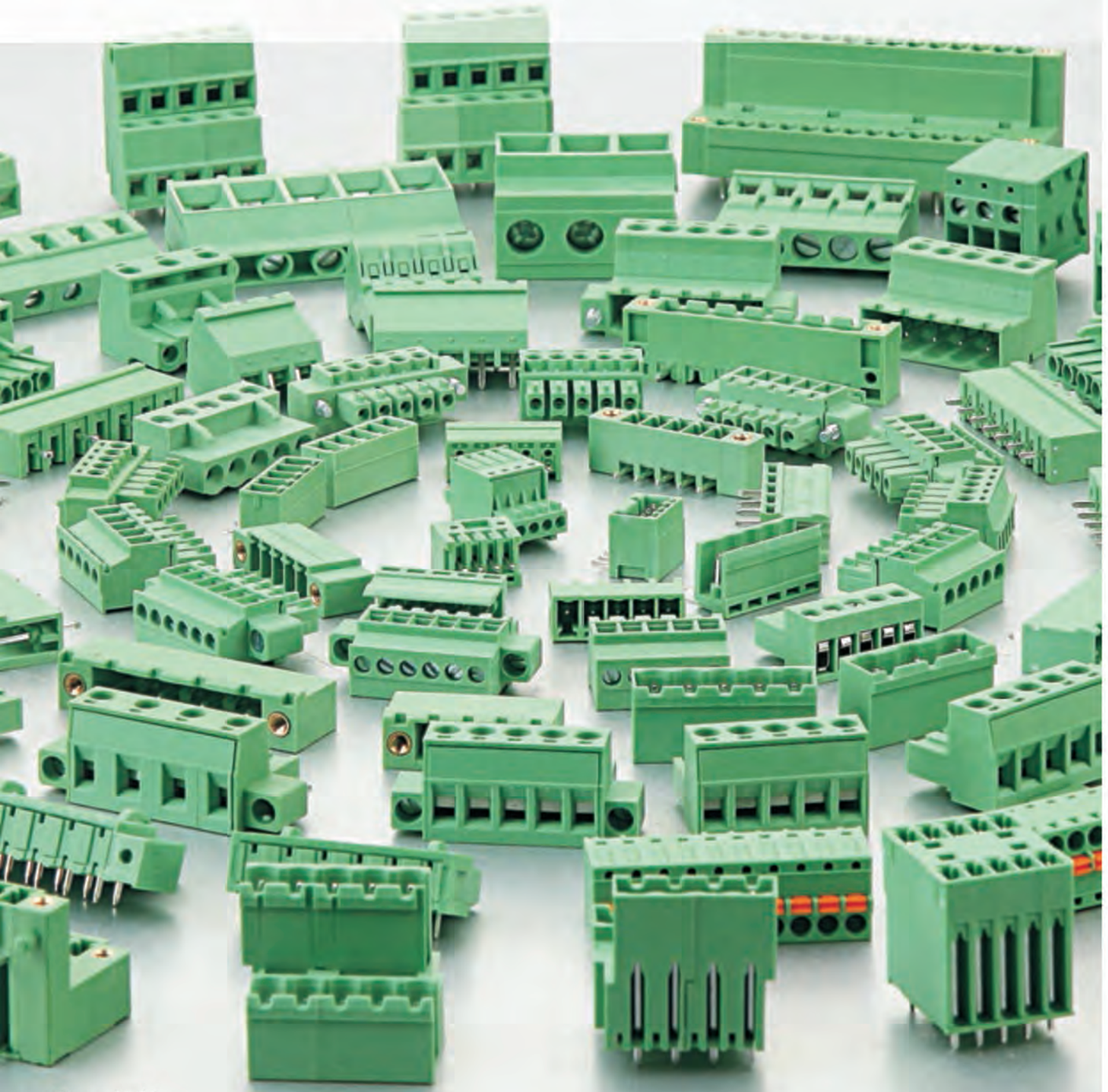

螺钉式PCB接线端子
PCB SCREW TERMINAL BLOCK

订购方式/HOW TO ORDER:

□□□ - □□ - □□□ P - □□□ - X X X (客户需要 Customer Request)

型号 Model | 端子间距 Pitch | 极数 Pole | 颜色Color

0	未定义No definition	10	灰色Grey	40	绿色Green	70	透明Transp.
1	单倍间距Single pitch	20	蓝色Blue	50	橙色Orange	80	黄色Yellow
2	双倍间距Double pitch	30	黑色Black	60	红色Red	90	白色White

P013-030

插拔式接线端子
PLUG–IN TERMINAL BLOCK

订购方式/HOW TO ORDER:

□□□ - □□ - □□□ P - □□□ - X X X (客户需要 Customer Request)

型号 Model | 端子间距 Pitch | 极数 Pole | 颜色Color

0	未定义No definition	10	灰色Grey	40	绿色Green	70	透明Transp.
1	单倍间距Single pitch	20	蓝色Blue	50	橙色Orange	80	黄色Yellow
2	双倍间距Double pitch	30	黑色Black	60	红色Red	90	白色White

P031-072

弹簧式PCB接线端子
PCB SPRING TERMINAL BLOCK

订购方式/HOW TO ORDER:

□□□ - □□ - □□□ P - □□□ - X X X (客户需要 Customer Request)

型号 Model | 端子间距 Pitch | 极数 Pole | 颜色Color

0	未定义No definition	10	灰色Grey	40	绿色Green	70	透明Transp.
1	单倍间距Single pitch	20	蓝色Blue	50	橙色Orange	80	黄色Yellow
2	双倍间距Double pitch	30	黑色Black	60	红色Red	90	白色White

P073-078

贯通式接线端子
FEED THROUGH TERMINAL BLOCK

订购方式/HOW TO ORDER:

□□□ - □□ - □□□ P - □□□ - X X X (客户需要 Customer Request)

型号 Model | 端子间距 Pitch | 极数 Pole | 颜色Color

0	未定义No definition	10	灰色Grey	40	绿色Green	70	透明Transp.
1	单倍间距Single pitch	20	蓝色Blue	50	橙色Orange	80	黄色Yellow
2	双倍间距Double pitch	30	黑色Black	60	红色Red	90	白色White

P079-083

栅板式接线端子
BARRIER TERMINAL BLOCK

订购方式/HOW TO ORDER:

□□□ - □□ P - □□□ - X X X (客户需要 Customer Request)

型号 Model | 极数 Pole | 颜色Color

0	未定义No definition	10	灰色Grey	40	绿色Green	70	透明Transp.
1	单倍间距Single pitch	20	蓝色Blue	50	橙色Orange	80	黄色Yellow
2	双倍间距Double pitch	30	黑色Black	60	红色Red	90	白色White

P084-120

更多详细信息请来电咨询或登录网站 http://cxjialian.cn.alibaba.com 查询。

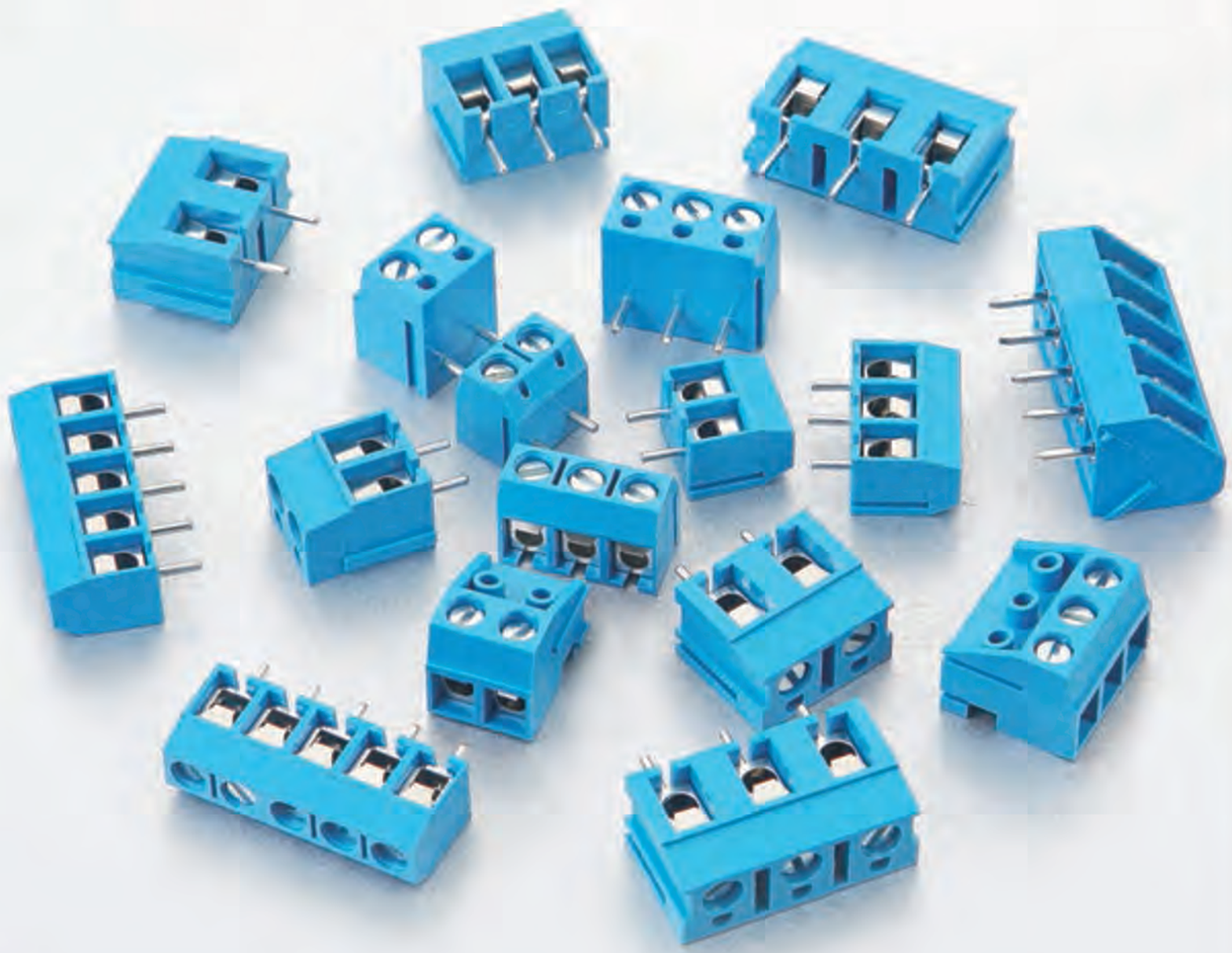

螺钉式PCB接线端子
PCB SCREW TERMINAL BLOCK

螺钉式PCB接线端子，结构设计兼顾了接线方便，螺钉连接牢固的特点，可以连接截面为0.08mm²至 10mm²的所有类型的导线，间距2.54mm至15.0mm可供选择。产品设计符合IEC60998、UL1059、CSA C22.2 No.158等国际标准。

PCB universal screw terminal blocks, this typical feature of the screw connection system is characterized by the easy connection and extremely high contact strengths. Provide the wire size from 0.08mm² to 10mm², Available with different pitches from 2.54mm to 15.0mm. The product is designed in accordance with IEC 60998, UL1059, CSA C22.2 NO.158 standards.

Pitch:5.0/10.0mm

MODEL:JL300V

认证/CERTIFICATION	
材质及电镀	
螺丝	M3.0, 钢, 镀锌
弹片	磷青铜, 镀镍
方针	黄铜, 镀锡
塑件	PBT, UL94V-0
电气性能	
参考标准	UL / IEC
额定电压	250V / 250V
额定电流	16A / 17.5A
使用线径	22-14AWG / 1.5mm²
接触电阻	20mΩ
绝缘电阻	500MΩ/DC500V
耐电压	AC2000V/1Min
机械性能	
温度范围	-30℃~+120℃
瞬时温度	+250℃ 5秒
扭矩	5.10kgf-cm/0.5Nm/4.43Lbin
剥线长度	4.5-5mm

MATERIAL	
Screws	M3.0 Steel Zn plated
Shrapnel	Phosphor bronze, Ni plated
Pin header	Brass, Sn plated
Housing	PBT, UL94V-0
ELECTRICAL	
Standard	UL / IEC
Rated voltage	250V / 250V
Rated current	16A / 17.5A
Wire range	22-14AWG / 1.5mm²
Contact resistance	20mΩ
Insulation resistance	500MΩ/DC500V
Withstanding voltage	AC2000V/1Min
MECHANICAL	
Temp. range	-30℃~+120℃
Max. soldering	+250℃ for 5 Sec
Torque	5.10kgf-cm/0.5Nm/4.43Lbin
Strip length	4.5~5mm

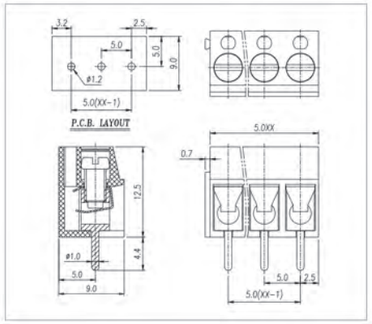

Pitch:5.0/10.0mm

MODEL:JL300R

认证/CERTIFICATION	
材质及电镀	
螺丝	M3.0, 钢, 镀锌
弹片	磷青铜, 镀镍
方针	黄铜, 镀锡
塑件	PBT, UL94V-0
电气性能	
参考标准	UL / IEC
额定电压	250V / 250V
额定电流	16A / 17.5A
使用线径	22-14AWG / 1.5mm²
接触电阻	20mΩ
绝缘电阻	500MΩ/DC500V
耐电压	AC2000V/1Min
机械性能	
温度范围	-30℃~+120℃
瞬时温度	+250℃ 5秒
扭矩	5.10kgf-cm/0.5Nm/4.43Lbin
剥线长度	4.5-5mm

MATERIAL	
Screws	M3.0 Steel Zn plated
Shrapnel	Phosphor bronze, Ni plated
Pin header	Brass, Sn plated
Housing	PBT, UL94V-0
ELECTRICAL	
Standard	UL / IEC
Rated voltage	250V / 250V
Rated current	16A / 17.5A
Wire range	22-14AWG / 1.5mm²
Contact resistance	20mΩ
Insulation resistance	500MΩ/DC500V
Withstanding voltage	AC2000V/1Min
MECHANICAL	
Temp. range	-30℃~+120℃
Max. soldering	+250℃ for 5 Sec
Torque	5.10kgf-cm/0.5Nm/4.43Lbin
Strip length	4.5~5mm

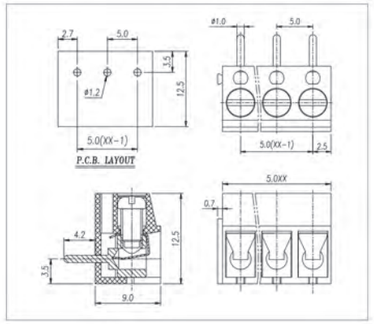

Pitch:5.0/10.0mm

MODEL:JL305V

认证/CERTIFICATION	
材质及电镀	
螺丝	M2.5, 钢, 镀锌
弹片	磷青铜, 镀镍
方针	黄铜, 镀锡
塑件	PBT, UL94V-0
电气性能	
参考标准	UL / IEC
额定电压	250V / 250V
额定电流	16A / 17.5A
使用线径	22-14AWG / 2.5mm²
接触电阻	20mΩ
绝缘电阻	500MΩ/DC500V
耐电压	AC2000V/1Min
机械性能	
温度范围	-30℃~+120℃
瞬时温度	+250℃ 5秒
扭矩	4.08kgf-cm/0.4Nm/3.54Lbin
剥线长度	4.5-5mm

MATERIAL	
Screws	M2.5 Steel Zn plated
Shrapnel	Phosphor bronze, Ni plated
Pin header	Brass, Sn plated
Housing	PBT, UL94V-0
ELECTRICAL	
Standard	UL / IEC
Rated voltage	250V / 250V
Rated current	16A / 17.5A
Wire range	22-14AWG / 2.5mm²
Contact resistance	20mΩ
Insulation resistance	500MΩ/DC500V
Withstanding voltage	AC2000V/1Min
MECHANICAL	
Temp. range	-30℃~+120℃
Max. soldering	+250℃ for 5 Sec
Torque	4.08kgf-cm/0.4Nm/3.54Lbin
Strip length	4.5~5mm

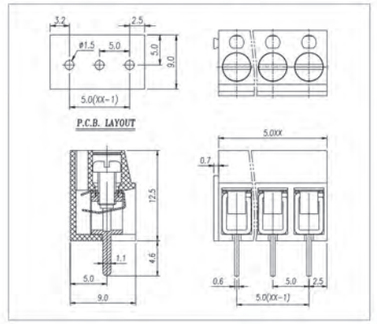

Pitch:7.5/15.0mm

MODEL:JL370V

认证/CERTIFICATION

材质及电镀		
螺丝	M3.0, 钢, 镀锌	
弹片	磷青铜, 镀镍	
方针	黄铜, 镀锡	
塑件	PBT, UL94V-0	
电气性能		
参考标准	UL	IEC
额定电压	250V	450V
额定电流	16A	24A
使用线径	22-14AWG	2.5mm²
接触电阻	20mΩ	
绝缘电阻	500MΩ/DC500V	
耐电压	AC2000V/1Min	
机械性能		
温度范围	-30℃~+120℃	
瞬时温度	+250℃ 5秒	
扭矩	5.10kgf-cm/0.5Nm/4.43Lbin	
剥线长度	4.5-5mm	

MATERIAL		
Screws	M3.0 Steel Zn plated	
Shrapnel	Phosphor bronze, Ni plated	
Pin header	Brass, Sn plated	
Housing	PBT, UL94V-0	
ELECTRICAL		
Standard	UL	IEC
Rated voltage	250V	450V
Rated current	16A	24A
Wire range	22-14AWG	2.5mm²
Contact resistance	20mΩ	
Insulation resistance	500MΩ/DC500V	
Withstanding voltage	AC2000V/1Min	
MECHANICAL		
Temp. range	-30℃~+120℃	
Max. soldering	+250℃ for 5 Sec	
Torque	5.10kgf-cm/0.5Nm/4.43Lbin	
Strip length	4.5~5mm	

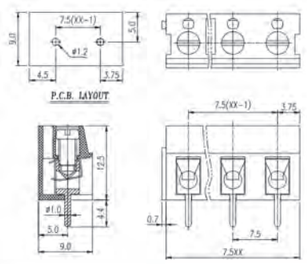

Pitch:7.5/15.0mm

MODEL:JL375V

认证/CERTIFICATION

材质及电镀		
螺丝	M3.0, 钢, 镀锌	
弹片	磷青铜, 镀镍	
方针	黄铜, 镀锡	
塑件	PBT, UL94V-0	
电气性能		
参考标准	UL	IEC
额定电压	250V	450V
额定电流	16A	24A
使用线径	22-14AWG	2.5mm²
接触电阻	20mΩ	
绝缘电阻	500MΩ/DC500V	
耐电压	AC2000V/1Min	
机械性能		
温度范围	-30℃~+120℃	
瞬时温度	+250℃ 5秒	
扭矩	5.10kgf-cm/0.5Nm/4.43Lbin	
剥线长度	4.5-5mm	

MATERIAL		
Screws	M3.0 Steel Zn plated	
Shrapnel	Phosphor bronze, Ni plated	
Pin header	Brass, Sn plated	
Housing	PBT, UL94V-0	
ELECTRICAL		
Standard	UL	IEC
Rated voltage	250V	450V
Rated current	16A	24A
Wire range	22-14AWG	2.5mm²
Contact resistance	20mΩ	
Insulation resistance	500MΩ/DC500V	
Withstanding voltage	AC2000V/1Min	
MECHANICAL		
Temp. range	-30℃~+120℃	
Max. soldering	+250℃ for 5 Sec	
Torque	5.10kgf-cm/0.5Nm/4.43Lbin	
Strip length	4.5~5mm	

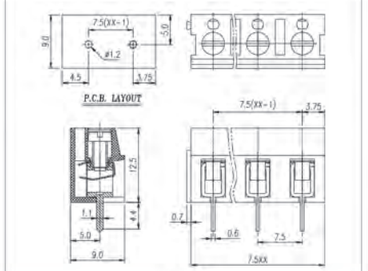

Pitch:5.0/10.0mm

MODEL:JL301V

认证/CERTIFICATION

材质及电镀		
螺丝	M2.5, 钢, 镀锌	
弹片	磷青铜, 镀镍	
方针	黄铜, 镀锡	
塑件	PBT, UL94V-0	
电气性能		
参考标准	UL	IEC
额定电压	250V	250V
额定电流	16A	17.5A
使用线径	22-14AWG	1.5mm²
接触电阻	20mΩ	
绝缘电阻	500MΩ/DC500V	
耐电压	AC2000V/1Min	
机械性能		
温度范围	-30℃~+120℃	
瞬时温度	+250℃ 5秒	
扭矩	4.08kgf-cm/0.4Nm/3.54Lbin	
剥线长度	4.5-5mm	

MATERIAL		
Screws	M2.5 Steel Zn plated	
Shrapnel	Phosphor bronze, Ni plated	
Pin header	Brass, Sn plated	
Housing	PBT, UL94V-0	
ELECTRICAL		
Standard	UL	IEC
Rated voltage	250V	250V
Rated current	16A	17.5A
Wire range	22-14AWG	2.5mm²
Contact resistance	20mΩ	
Insulation resistance	500MΩ/DC500V	
Withstanding voltage	AC2000V/1Min	
MECHANICAL		
Temp. range	-30℃~+120℃	
Max. soldering	+250℃ 5 Sec	
Torque	4.08kgf-cm/0.4Nm/3.54Lbin	
Strip length	4.5~5mm	

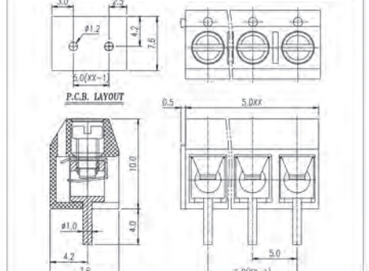

Pitch:5.0/10.0mm

MODEL:JL301R

认证/CERTIFICATION

材质及电镀		
螺丝	M2.5, 钢, 镀锌	
弹片	磷青铜, 镀镍	
方针	黄铜, 镀锡	
塑件	PBT, UL94V-0	
电气性能		
参考标准	UL	IEC
额定电压	250V	250V
额定电流	16A	17.5A
使用线径	22-14AWG	1.5mm²
接触电阻	20mΩ	
绝缘电阻	500MΩ/DC500V	
耐电压	AC2000V/1Min	
机械性能		
温度范围	-30℃~+120℃	
瞬时温度	+250℃ 5秒	
扭矩	4.08kgf-cm/0.4Nm/3.54Lbin	
剥线长度	4.5-5mm	

MATERIAL		
Screws	M2.5 Steel Zn plated	
Shrapnel	Phosphor bronze, Ni plated	
Pin header	Brass, Sn plated	
Housing	PBT, UL94V-0	
ELECTRICAL		
Standard	UL	IEC
Rated voltage	250V	250V
Rated current	16A	17.5A
Wire range	22-14AWG	1.5mm²
Contact resistance	20mΩ	
Insulation resistance	500MΩ/DC500V	
Withstanding voltage	AC2000V/1Min	
MECHANICAL		
Temp. range	-30℃~+120℃	
Max. soldering	+250℃ 5 Sec	
Torque	4.08kgf-cm/0.4Nm/3.54Lbin	
Strip length	4.5~5mm	

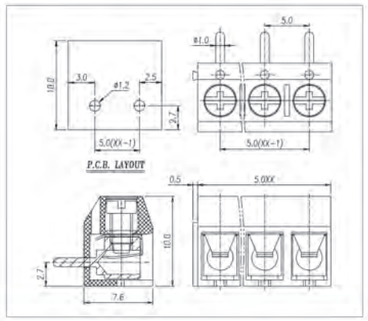

Pitch:5.0/10.0mm

MODEL:JL306V

认证/CERTIFICATION

材质及电镀		
螺丝	M2.5, 钢, 镀锌	
弹片	磷青铜, 镀镍	
方针	黄铜, 镀锡	
塑件	PBT, UL94V-0	
电气性能		
参考标准	UL	IEC
额定电压	250V	250V
额定电流	16A	17.5A
使用线径	22-14AWG	1.5mm²
接触电阻	20mΩ	
绝缘电阻	500MΩ/DC500V	
耐电压	AC2000V/1Min	
机械性能		
温度范围	-30℃~+120℃	
瞬时温度	+250℃ 5秒	
扭矩	4.08kgf-cm/0.4Nm/3.54Lbin	
剥线长度	4.5-5mm	

MATERIAL		
Screws	M2.5 Steel Zn plated	
Shrapnel	Phosphor bronze, Ni plated	
Pin header	Brass, Sn plated	
Housing	PBT, UL94V-0	
ELECTRICAL		
Standard	UL	IEC
Rated voltage	250V	250V
Rated current	16A	17.5A
Wire range	22-14AWG	1.5mm²
Contact resistance	20mΩ	
Insulation resistance	500MΩ/DC500V	
Withstanding voltage	AC2000V/1Min	
MECHANICAL		
Temp. range	-30℃~+120℃	
Max. soldering	+250℃ 5 Sec	
Torque	4.08kgf-cm/0.4Nm/3.54Lbin	
Strip length	4.5~5mm	

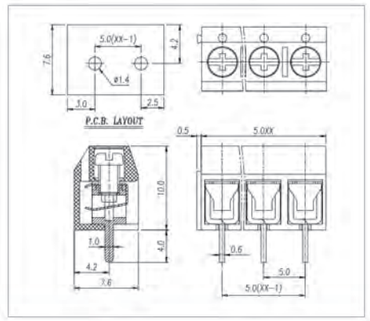

Pitch:5.0/10.0mm

MODEL:JL332K

认证/CERTIFICATION

材质及电镀		
螺丝	M2.5, 钢, 镀锌	
弹片	磷青铜, 镀镍	
方针	黄铜, 镀锡	
塑件	PBT, UL94V-0	
电气性能		
参考标准	UL	IEC
额定电压	300V	250V
额定电流	10A	17.5A
使用线径	28-16AWG	1.5mm²
接触电阻	20mΩ	
绝缘电阻	500MΩ/DC500V	
耐电压	AC2000V/1Min	
机械性能		
温度范围	-30℃~+120℃	
瞬时温度	+250℃ 5秒	
扭矩	4.08kgf-cm/0.4Nm/3.54Lbin	
剥线长度	4.5-5mm	

MATERIAL		
Screws	M2.5 Steel Zn plated	
Shrapnel	Phosphor bronze, Ni plated	
Pin header	Brass, Sn plated	
Housing	PBT, UL94V-0	
ELECTRICAL		
Standard	UL	IEC
Rated voltage	300V	250V
Rated current	10A	17.5A
Wire range	28-16AWG	1.5mm²
Contact resistance	20mΩ	
Insulation resistance	500MΩ/DC500V	
Withstanding voltage	AC2000V/1Min	
MECHANICAL		
Temp. range	-30℃~+120℃	
Max. soldering	+250℃ 5 Sec	
Torque	4.08kgf-cm/0.4Nm/3.54Lbin	
Strip length	4.5~5mm	

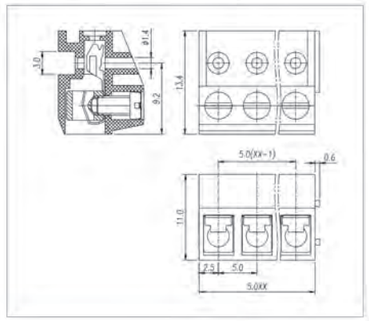

Pitch:5.0/10.0mm

MODEL:JL331

认证/CERTIFICATION		
材质及电镀		
螺丝	M2.5, 钢, 镀锌	
弹片	磷青铜, 镀镍	
方针	黄铜, 镀锡	
塑件	PA66, UL94V-0	
电气性能		
参考标准	UL	IEC
额定电压	300V	250V
额定电流	12A	17.5A
使用线径	22-14AWG	1.5mm²
接触电阻	20mΩ	
绝缘电阻	500MΩ/DC500V	
耐电压	AC2000V/1Min	
机械性能		
温度范围	-40℃~+105℃	
瞬时温度	+250℃ 5秒	
扭矩	4.08kgf-cm/0.4Nm/3.54Lbin	
剥线长度	5-6mm	

MATERIAL		
Screws	M2.5 Steel Zn plated	
Shrapnel	Phosphor bronze, Ni plated	
Pin header	Brass, Sn plated	
Housing	PA66, UL94V-0	
ELECTRICAL		
Standard	UL	IEC
Rated voltage	300V	250V
Rated current	12A	17.5A
Wire range	22-14AWG	1.5mm²
Contact resistance	20mΩ	
Insulation resistance	500MΩ/DC500V	
Withstanding voltage	AC2000V/1Min	
MECHANICAL		
Temp. range	-30℃~+105℃	
Max. soldering	+250℃ for 5 Sec	
Torque	4.08kgf-cm/0.4Nm/3.54Lbin	
Strip length	5~6mm	

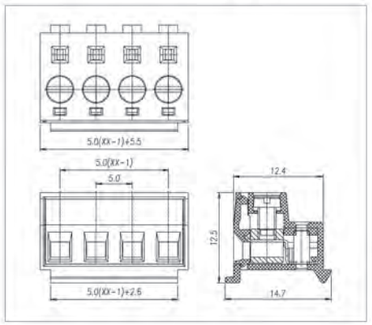

Pitch:5.0/10.0mm

MODEL:JL332J

认证/CERTIFICATION		
材质及电镀		
方针	黄铜, 镀锡	
塑件	PBT, UL94V-0	
电气性能		
参考标准	UL	IEC
额定电压	300V	250V
额定电流	10A	17.5A
接触电阻	20mΩ	
绝缘电阻	500MΩ/DC500V	
耐电压	AC2000V/1Min	
机械性能		
温度范围	-30℃~+120℃	
瞬时温度	+250℃ 5秒	

MATERIAL		
Pin header	Brass, Sn plated	
Housing	PBT, UL94V-0	
ELECTRICAL		
Standard	UL	IEC
Rated voltage	300V	250V
Rated current	10A	17.5A
Contact resistance	20mΩ	
Insulation resistance	500MΩ/DC500V	
Withstanding voltage	AC2000V/1Min	
MECHANICAL		
Temp. range	-30℃~+120℃	
Max. soldering	+250℃ for 5 Sec	

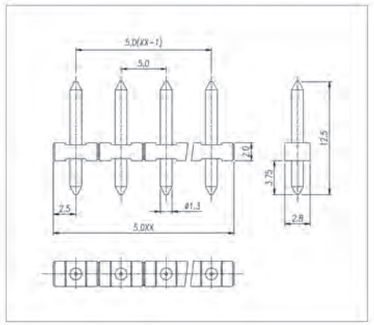

Pitch:3.5/3.96mm

MODEL:JL350V

认证/CERTIFICATION		
材质及电镀		
螺丝	M2.0, 钢, 镀锌	
弹片	磷青铜, 镀镍	
方针	黄铜, 镀锡	
塑件	PA66, UL94V-0	
电气性能		
参考标准	UL	IEC
额定电压	300V	250V
额定电流	10A	10A
使用线径	24-18AWG	1.0mm²
接触电阻	20mΩ	
绝缘电阻	500MΩ/DC500V	
耐电压	AC2000V/1Min	
机械性能		
温度范围	-40℃~+105℃	
瞬时温度	+250℃ 5秒	
扭矩	2.04kgf-cm/0.2Nm/1.77Lbin	
剥线长度	4.5-5mm	

MATERIAL		
Screws	M2.0 Steel Zn plated	
Shrapnel	Phosphor bronze, Ni plated	
Pin header	Brass, Sn plated	
Housing	PA66, UL94V-0	
ELECTRICAL		
Standard	UL	IEC
Rated voltage	300V	250V
Rated current	10A	10A
Wire range	24-18AWG	1.0mm²
Contact resistance	20mΩ	
Insulation resistance	500MΩ/DC500V	
Withstanding voltage	AC2000V/1Min	
MECHANICAL		
Temp. range	-40℃~+105℃	
Max. soldering	+250℃ for 5 Sec	
Torque	2.04kgf-cm/0.2Nm/1.77Lbin	
Strip length	4.5-5mm	

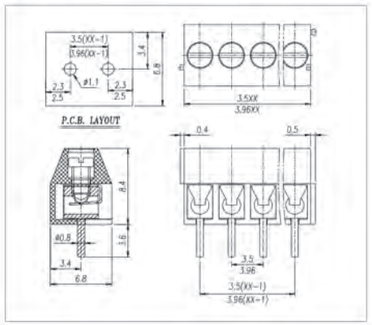

Pitch:3.5/3.96mm

MODEL:JL350R

认证/CERTIFICATION		
材质及电镀		
螺丝	M2.0, 钢, 镀锌	
弹片	磷青铜, 镀镍	
方针	黄铜, 镀锡	
塑件	PA66, UL94V-0	
电气性能		
参考标准	UL	IEC
额定电压	300V	250V
额定电流	10A	10A
使用线径	24-18AWG	1.0mm²
接触电阻	20mΩ	
绝缘电阻	500MΩ/DC500V	
耐电压	AC2000V/1Min	
机械性能		
温度范围	-40℃~+105℃	
瞬时温度	+250℃ 5秒	
扭矩	2.04kgf-cm/0.2Nm/1.77Lbin	
剥线长度	4.5-5mm	

MATERIAL		
Screws	M2.0 Steel Zn plated	
Shrapnel	Phosphor bronze, Ni plated	
Pin header	Brass, Sn plated	
Housing	PA66, UL94V-0	
ELECTRICAL		
Standard	UL	IEC
Rated voltage	300V	250V
Rated current	10A	10A
Wire range	24-18AWG	1.0mm²
Contact resistance	20mΩ	
Insulation resistance	500MΩ/DC500V	
Withstanding voltage	AC2000V/1Min	
MECHANICAL		
Temp. range	-40℃~+105℃	
Max. soldering	+250℃ for 5 Sec	
Torque	2.04kgf-cm/0.2Nm/1.77Lbin	
Strip length	4.5-5mm	

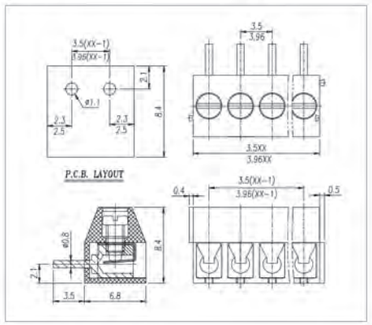

Pitch:3.5mm

MODEL:JL350C

认证/CERTIFICATION		
材质及电镀		
螺丝	M2.0, 钢, 镀锌	
弹片	磷青铜, 镀镍.	
方针	黄铜, 镀锡	
塑件	PA66, UL94V-0	
电气性能		
参考标准	UL	IEC
额定电压	300V	130V
额定电流	10A	10A
使用线径	24-18AWG	1.0mm²
接触电阻	20mΩ	
绝缘电阻	500MΩ/DC500V	
耐电压	AC2000V/1Min	
机械性能		
温度范围	-40℃~+105℃	
瞬时温度	+250℃ 5秒	
扭矩	2.04kgf-cm/0.2Nm/1.77Lbin	
剥线长度	4.5-5mm	

MATERIAL		
Screws	M2.5 Steel Zn plated	
Shrapnel	Phosphor bronze, Ni plated	
Pin header	Brass, Sn plated	
Housing	PA66, UL94V-0	
ELECTRICAL		
Standard	UL	IEC
Rated voltage	300V	130V
Rated current	10A	10A
Wire range	24-18AWG	1.0mm²
Contact resistance	20mΩ	
Insulation resistance	500MΩ/DC500V	
Withstanding voltage	AC2000V/1Min	
MECHANICAL		
Temp. range	-40℃~+105℃	
Max. soldering	+250℃ 5 Sec	
Torque	2.04kgf-cm/0.2Nm/1.77Lbin	
Strip length	4.5-5mm	

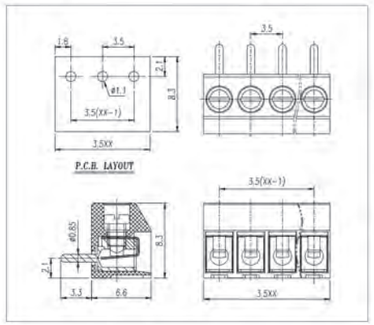

Pitch:5.0/10.0mm

MODEL:JL126V

认证/CERTIFICATION		
材质及电镀		
螺丝	M2.5, 钢, 镀锌	
弹片	磷青铜, 镀镍	
方针	黄铜, 镀锡	
塑件	PA66, UL94V-0	
电气性能		
参考标准	UL	IEC
额定电压	300V	250V
额定电流	8A	18A
使用线径	26-14AWG	2.5mm²
接触电阻	20mΩ	
绝缘电阻	500MΩ/DC500V	
耐电压	AC2000V/1Min	
机械性能		
温度范围	-40℃~+105℃	
瞬时温度	+250℃ 5秒	
扭矩	4.08kgf-cm/0.4Nm/3.54Lbin	
剥线长度	6-7mm	

MATERIAL		
Screws	M2.5 Steel Zn plated	
Shrapnel	Phosphor bronze, Ni plated	
Pin header	Brass, Sn plated	
Housing	PA66, UL94V-0	
ELECTRICAL		
Standard	UL	IEC
Rated voltage	300V	250V
Rated current	8A	18A
Wire range	26-14AWG	2.5mm²
Contact resistance	20mΩ	
Insulation resistance	500MΩ/DC500V	
Withstanding voltage	AC2000V/1Min	
MECHANICAL		
Temp. range	-40℃~+105℃	
Max. soldering	+250℃ 5 Sec	
Torque	4.08kgf-cm/0.4Nm/3.54Lbin	
Strip length	6-7mm	

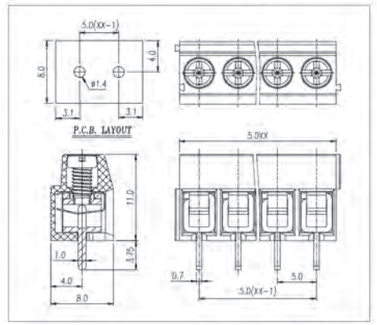

MODEL:JL126R

认证/CERTIFICATION		
材质及电镀		
螺丝	M2.5, 钢, 镀锌	
弹片	磷青铜, 镀镍	
方针	黄铜, 镀锡	
塑件	PA66, UL94V-0	
电气性能		
参考标准	UL	IEC
额定电压	300V	250V
额定电流	8A	18A
使用线径	24-14AWG	2.5mm²
接触电阻	20mΩ	
绝缘电阻	500MΩ/DC500V	
耐电压	AC2000V/1Min	
机械性能		
温度范围	-40℃~+105℃	
瞬时温度	+250℃ 5秒	
扭矩	4.08kgf-cm/0.4Nm/3.54Lbin	
剥线长度	6-7mm	

MATERIAL		
Screws	M2.5 Steel Zn plated	
Shrapnel	Phosphor bronze, Ni plated	
Pin header	Brass, Sn plated	
Housing	PA66, UL94V-0	
ELECTRICAL		
Standard	UL	IEC
Rated voltage	300V	250V
Rated current	8A	18A
Wire range	26-14AWG	2.5mm²
Contact resistance	20mΩ	
Insulation resistance	500MΩ/DC500V	
Withstanding voltage	AC2000V/1Min	
MECHANICAL		
Temp. range	-40℃~+105℃	
Max. soldering	+250℃ 5 Sec	
Torque	4.08kgf-cm/0.4Nm/3.54Lbin	
Strip length	6-7mm	

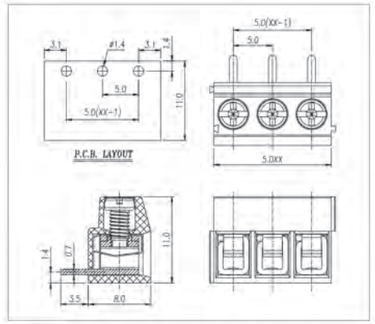

MODEL:JL166V

认证/CERTIFICATION		
材质及电镀		
螺丝	M2.5, 钢, 镀锌	
弹片	磷青铜, 镀镍	
方针	黄铜, 镀锡	
塑件	PA66, UL94V-0	
电气性能		
参考标准	UL	IEC
额定电压	300V	250V
额定电流	15A	24A
使用线径	26-14AWG	2.5mm²
接触电阻	20mΩ	
绝缘电阻	500MΩ/DC500V	
耐电压	AC2000V/1Min	
机械性能		
温度范围	-40℃~+105℃	
瞬时温度	+250℃ 5秒	
扭矩	4.08kgf-cm/0.4Nm/3.54Lbin	
剥线长度	6-7mm	

MATERIAL		
Screws	M2.5 Steel Zn plated	
Shrapnel	Phosphor bronze, Ni plated	
Pin header	Brass, Sn plated	
Housing	PA66, UL94V-0	
ELECTRICAL		
Standard	UL	IEC
Rated voltage	300V	250V
Rated current	15A	24A
Wire range	26-4AWG	2.5mm²
Contact resistance	20mΩ	
Insulation resistance	500MΩ/DC500V	
Withstanding voltage	AC2000V/1Min	
MECHANICAL		
Temp. range	-40℃~+105℃	
Max. soldering	+250℃ 5 Sec	
Torque	4.08kgf-cm/0.4Nm/3.54Lbin	
Strip length	6-7mm	

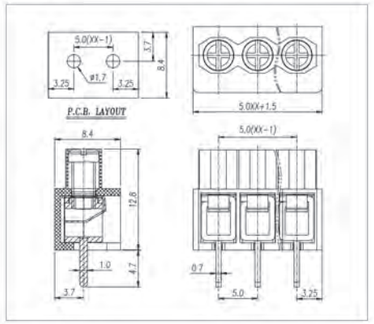

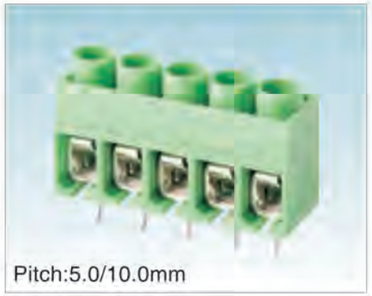

MODEL:JL167V

认证/CERTIFICATION		
材质及电镀		
螺丝	M2.5, 钢, 镀锌	
弹片	磷青铜, 镀镍	
方针	黄铜, 镀锡	
塑件	PA66, UL94V-0	
电气性能		
参考标准	UL	IEC
额定电压	300V	250V
额定电流	15A	24A
使用线径	26-14AWG	2.5mm²
接触电阻	20mΩ	
绝缘电阻	500MΩ/DC500V	
耐电压	AC2000V/1Min	
机械性能		
温度范围	-40℃~+105℃	
瞬时温度	+250℃ 5秒	
扭矩	4.08kgf-cm/0.4Nm/3.54Lbin	
剥线长度	6-7mm	

MATERIAL		
Screws	M2.5 Steel Zn plated	
Shrapnel	Phosphor bronze, Ni plated	
Pin header	Brass, Sn plated	
Housing	PA66, UL94V-0	
ELECTRICAL		
Standard	UL	IEC
Rated voltage	300V	250V
Rated current	15A	24A
Wire range	26-14AWG	2.5mm²
Contact resistance	20mΩ	
Insulation resistance	500MΩ/DC500V	
Withstanding voltage	AC2000V/1Min	
MECHANICAL		
Temp. range	-40℃~+105℃	
Max. soldering	+250℃ 5 Sec	
Torque	4.08kgf-cm/0.4Nm/3.54Lbin	
Strip length	6-7mm	

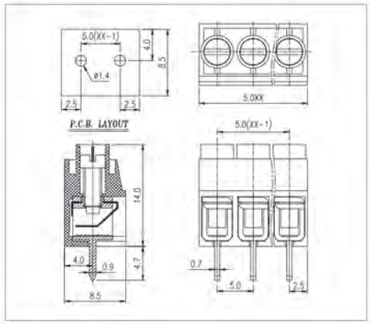

MODEL:JL167R

认证/CERTIFICATION		
材质及电镀		
螺丝	M2.5, 钢, 镀锌	
弹片	磷青铜, 镀镍	
方针	黄铜, 镀锡	
塑件	PA66, UL94V-0	
电气性能		
参考标准	UL	IEC
额定电压	300V	250V
额定电流	15A	24A
使用线径	26-14AWG	2.5mm²
接触电阻	20mΩ	
绝缘电阻	500MΩ/DC500V	
耐电压	AC2000V/1Min	
机械性能		
温度范围	-40℃~+105℃	
瞬时温度	+250℃ 5秒	
扭矩	4.08kgf-cm/0.4Nm/3.54Lbin	
剥线长度	6-7mm	

MATERIAL		
Screws	M2.5 Steel Zn plated	
Shrapnel	Phosphor bronze, Ni plated	
Pin header	Brass, Sn plated	
Housing	PA66, UL94V-0	
ELECTRICAL		
Standard	UL	IEC
Rated voltage	300V	250V
Rated current	15A	24A
Wire range	26-14AWG	2.5mm²
Contact resistance	20mΩ	
Insulation resistance	500MΩ/DC500V	
Withstanding voltage	AC2000V/1Min	
MECHANICAL		
Temp. range	-40℃~+105℃	
Max. soldering	+250℃ 5 Sec	
Torque	4.08kgf-cm/0.4Nm/3.54Lbin	
Strip length	6-7mm	

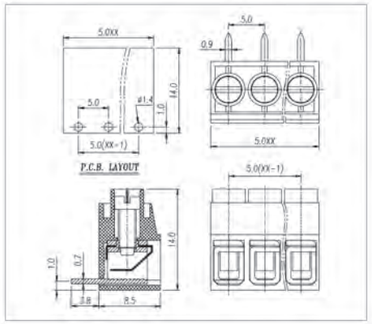

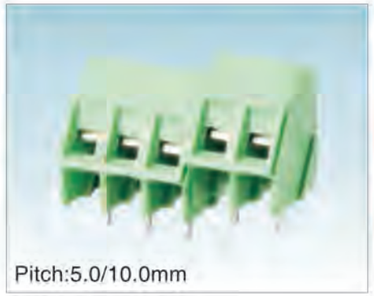

MODEL:JL103V

认证/CERTIFICATION		
材质及电镀		
螺丝	M2.5, 钢, 镀锌	
方块	黄铜, 镀镍	
焊脚	黄铜, 镀锡	
塑件	PA66, UL94V-0	
电气性能		
参考标准	UL	IEC
额定电压	300V	250V
额定电流	16A	24A
使用线径	24-12AWG	2.5mm²
接触电阻	20mΩ	
绝缘电阻	500MΩ/DC500V	
耐电压	AC2000V/1Min	
机械性能		
温度范围	-40℃~+105℃	
瞬时温度	+250℃ 5秒	
扭矩	4.08kgf-cm/0.4Nm/3.54Lbin	
剥线长度	6-7mm	

MATERIAL		
Screws	M2.5 Steel Zn plated	
Cage	Brass, Ni plated	
Pin header	Brass, Sn plated	
Housing	PA66, UL94V-0	
ELECTRICAL		
Standard	UL	IEC
Rated voltage	300V	250V
Rated current	16A	24A
Wire range	24-12AWG	2.5mm²
Contact resistance	20mΩ	
Insulation resistance	500MΩ/DC500V	
Withstanding voltage	AC2000V/1Min	
MECHANICAL		
Temp. range	-40℃~+105℃	
Max. soldering	+250℃ 5 Sec	
Torque	4.08kgf-cm/0.4Nm/3.54Lbin	
Strip length	6-7mm	

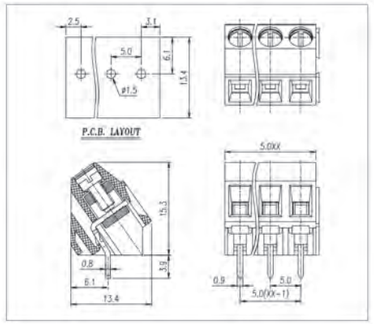

MODEL:JL121V

认证/CERTIFICATION		
材质及电镀		
螺丝	M3.0, 钢, 镀锌	
方块	黄铜, 镀镍	
焊脚	黄铜, 镀锡	
塑件	PA66, UL94V-0	
电气性能		
参考标准	UL	IEC
额定电压	300V	250V
额定电流	10A	24A
使用线径	24-14AWG	2.5mm²
接触电阻	20mΩ	
绝缘电阻	500MΩ/DC500V	
耐电压	AC2000V/1Min	
机械性能		
温度范围	-40℃~+105℃	
瞬时温度	+250℃ 5秒	
扭矩	5.10kgf-cm/0.5Nm/4.43Lbin	
剥线长度	6-7mm	

MATERIAL		
Screws	M3.0 Steel Zn plated	
Cage	Brass, Ni plated	
Pin header	Brass, Sn plated	
Housing	PA66, UL94V-0	
ELECTRICAL		
Standard	UL	IEC
Rated voltage	300V	250V
Rated current	10A	24A
Wire range	24-14AWG	2.5mm²
Contact resistance	20mΩ	
Insulation resistance	500MΩ/DC500V	
Withstanding voltage	AC2000V/1Min	
MECHANICAL		
Temp. range	-40℃~+105℃	
Max. soldering	+250℃ 5 Sec	
Torque	5.10kgf-cm/0.5Nm/4.43Lbin	
Strip length	6-7mm	

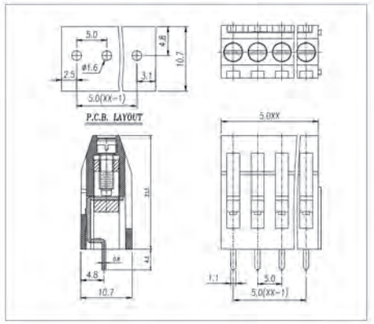

Pitch:5.0/10.0mm

MODEL:JL122V

认证/CERTIFICATION		
材质及电镀		
螺丝	M3.0, 钢, 镀锌	
方块	黄铜, 镀镍	
焊脚	黄铜, 镀锡	
塑件	PA66, UL94V-0	
电气性能		
参考标准	UL	IEC
额定电压	300V	250V
额定电流	10A	24A
使用线径	24-14AWG	2.5mm²
接触电阻	20mΩ	
绝缘电阻	500MΩ/DC500V	
耐电压	AC2000V/1Min	
机械性能		
温度范围	-40℃~+105℃	
瞬时温度	+250℃ 5秒	
扭矩	5.10kgf-cm/0.5Nm/4.43Lbin	
剥线长度	6-7mm	

MATERIAL		
Screws	M3.0 Steel Zn plated	
Cage	Brass, Ni plated	
Pin header	Brass, Sn plated	
Housing	PA66, UL94V-0	
ELECTRICAL		
Standard	UL	IEC
Rated voltage	300V	250V
Rated current	10A	24A
Wire range	24-14AWG	2.5mm²
Contact resistance	20mΩ	
Insulation resistance	500MΩ/DC500V	
Withstanding voltage	AC2000V/1Min	
MECHANICAL		
Temp. range	-40℃~+105℃	
Max. soldering	+250℃ 5 Sec	
Torque	5.10kgf-cm/0.5Nm/4.43Lbin	
Strip length	6-7mm	

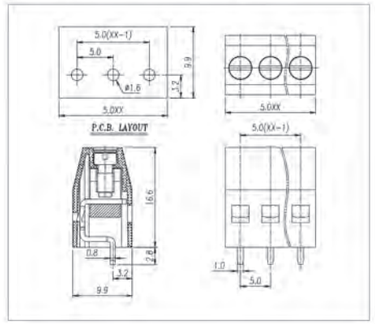

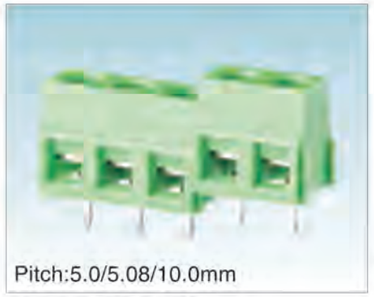

Pitch:5.0/5.08/10.0mm

MODEL:JL127V

认证/CERTIFICATION		
材质及电镀		
螺丝	M2.5, 钢, 镀锌	
方块	黄铜, 镀镍	
焊脚	黄铜, 镀锡	
塑件	PA66, UL94V-0	
电气性能		
参考标准	UL	IEC
额定电压	300V	250V
额定电流	12A	15A
使用线径	26-14AWG	1.5mm²
接触电阻	20mΩ	
绝缘电阻	500MΩ/DC500V	
耐电压	AC2000V/1Min	
机械性能		
温度范围	-40℃~+105℃	
瞬时温度	+250℃ 5秒	
扭矩	4.08kgf-cm/0.4Nm/3.54Lbin	
剥线长度	6-7mm	

MATERIAL		
Screws	M2.0 Steel Zn plated	
Cage	Brass, Ni plated	
Pin header	Brass, Sn plated	
Housing	PA66, UL94V-0	
ELECTRICAL		
Standard	UL	IEC
Rated voltage	300V	250V
Rated current	12A	15A
Wire range	26-14AWG	1.5mm²
Contact resistance	20mΩ	
Insulation resistance	500MΩ/DC500V	
Withstanding voltage	AC2000V/1Min	
MECHANICAL		
Temp. range	-40℃~+105℃	
Max. soldering	+250℃ 5 Sec	
Torque	4.08kgf-cm/0.4Nm/3.54Lbin	
Strip length	6-7mm	

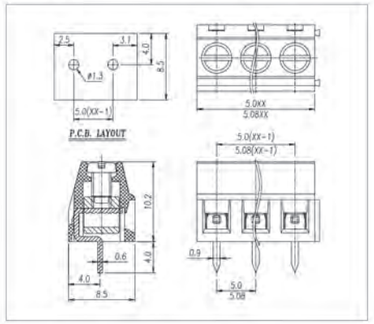

Pitch:5.0/7.5mm

MODEL:JL128V

认证/CERTIFICATION		
材质及电镀		
螺丝	M2.5, 钢, 镀锌	
方块	黄铜, 镀镍	
焊脚	黄铜, 镀锡	
塑件	PA66, UL94V-0	
电气性能		
参考标准	UL	IEC
额定电压	300V	250V
额定电流	16A	20A
使用线径	22-12AWG	2.5mm²
接触电阻	20mΩ	
绝缘电阻	500MΩ/DC500V	
耐电压	AC2000V/1Min	
机械性能		
温度范围	-40℃~+105℃	
瞬时温度	+250℃ 5秒	
扭矩	4.08kgf-cm/0.4Nm/3.54Lbin	
剥线长度	6-7mm	

MATERIAL		
Screws	M2.5 Steel Zn plated	
Cage	Brass, Ni plated	
Pin header	Brass, Sn plated	
Housing	Pa66, UL94V-0	
ELECTRICAL		
Standard	UL	IEC
Rated voltage	300V	250V
Rated current	16A	20A
Wire range	22-12AWG	2.5mm²
Contact resistance	20mΩ	
Insulation resistance	500MΩ/DC500V	
Withstanding voltage	AC2000V/1Min	
MECHANICAL		
Temp. range	-40℃~+105℃	
Max. soldering	+250℃ 5 Sec	
Torque	4.08kgf-cm/0.4Nm/3.54Lbin	
Strip length	6-7mm	

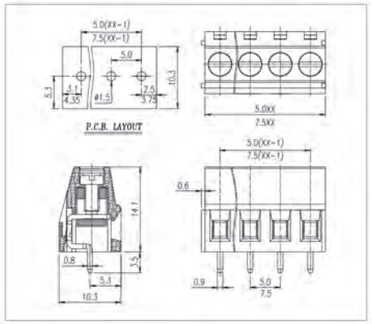

Pitch:5.0/7.5mm

MODEL:JL128R

认证/CERTIFICATION		
材质及电镀		
螺丝	M2.5, 钢, 镀锌	
方块	黄铜, 镀镍	
焊脚	黄铜, 镀锡	
塑件	PA66, UL94V-0	
电气性能		
参考标准	UL	IEC
额定电压	300V	250V
额定电流	16A	20A
使用线径	22-12AWG	2.5mm²
接触电阻	20mΩ	
绝缘电阻	500MΩ/DC500V	
耐电压	AC2000V/1Min	
机械性能		
温度范围	-40℃~+105℃	
瞬时温度	+250℃ 5秒	
扭矩	4.08kgf-cm/0.4Nm/3.54Lbin	
剥线长度	6-7mm	

MATERIAL		
Screws	M2.5 Steel Zn plated	
Cage	Brass, Ni plated	
Pin header	Brass, Sn plated	
Housing	PA66, UL94V-0	
ELECTRICAL		
Standard	UL	IEC
Rated voltage	300V	250V
Rated current	16A	20A
Wire range	22-12AWG	2.5mm²
Contact resistance	20mΩ	
Insulation resistance	500MΩ/DC500V	
Withstanding voltage	AC2000V/1Min	
MECHANICAL		
Temp. range	-40℃~+105℃	
Max. soldering	+250℃ 5 Sec	
Torque	4.08kgf-cm/0.4Nm/3.54Lbin	
Strip length	6-7mm	

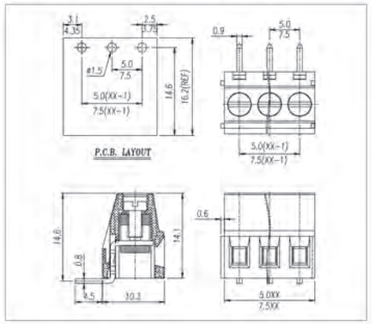

Pitch:5.0/7.5mm

MODEL:JL128E

认证/CERTIFICATION		
材质及电镀		
螺丝	M2.5, 钢, 镀锌	
方块	黄铜, 镀镍	
焊脚	黄铜, 镀锡	
塑件	PA66, UL94V-0	
电气性能		
参考标准	UL	IEC
额定电压	300V	250V
额定电流	16A	20A
使用线径	22-12AWG	2.5mm²
接触电阻	20mΩ	
绝缘电阻	500MΩ/DC500V	
耐电压	AC2000V/1Min	
机械性能		
温度范围	-40℃~+105℃	
瞬时温度	+250℃ 5秒	
扭矩	4.08kgf-cm/0.4Nm/3.54Lbin	
剥线长度	6-7mm	

MATERIAL		
Screws	M2.5 Steel Zn plated	
Cage	Brass, Ni plated	
Pin header	Brass, Sn plated	
Housing	PA66, UL94V-0	
ELECTRICAL		
Standard	UL	IEC
Rated voltage	300V	250V
Rated current	16A	20A
Wire range	22-12AWG	2.5mm²
Contact resistance	20mΩ	
Insulation resistance	500MΩ/DC500V	
Withstanding voltage	AC2000V/1Min	
MECHANICAL		
Temp. range	-40℃~+105℃	
Max. soldering	+250℃ 5 Sec	
Torque	4.08kgf-cm/0.4Nm/3.54Lbin	
Strip length	6-7mm	

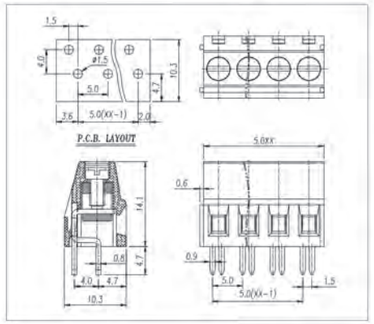

Pitch:5.08/7.62mm

MODEL:JL129V

认证/CERTIFICATION		
材质及电镀		
螺丝	M3.0, 钢, 镀锌	
方块	黄铜, 镀镍	
焊脚	黄铜, 镀锡	
塑件	PA66, UL94V-0	
电气性能		
参考标准	UL	IEC
额定电压	300V	250V
额定电流	20A	20A
使用线径	26-12AWG	2.5mm²
接触电阻	20mΩ	
绝缘电阻	500MΩ/DC500V	
耐电压	AC2000V/1Min	
机械性能		
温度范围	-40℃~+105℃	
瞬时温度	+250℃ 5秒	
扭矩	5.10kgf-cm/0.5Nm/4.43Lbin	
剥线长度	6-7mm	

MATERIAL		
Screws	M3.0 Steel Zn plated	
Cage	Brass, Ni plated	
Pin header	Brass, Sn plated	
Housing	PA66, UL94V-0	
ELECTRICAL		
Standard	UL	IEC
Rated voltage	300V	250V
Rated current	20A	20A
Wire range	26-12AWG	2.5mm²
Contact resistance	20mΩ	
Insulation resistance	500MΩ/DC500V	
Withstanding voltage	AC2000V/1Min	
MECHANICAL		
Temp. range	-40℃~+105℃	
Max. soldering	+250℃ 5 Sec	
Torque	5.10kgf-cm/0.5Nm/4.43Lbin	
Strip length	6-7mm	

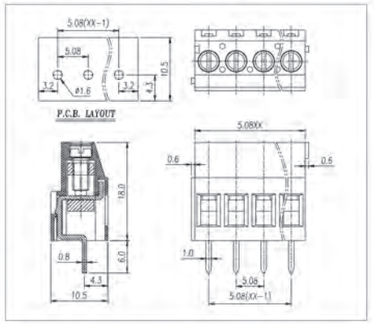

Pitch:5.08/7.62mm

MODEL:JL129R

认证/CERTIFICATION		
材质及电镀		
螺丝	M3.0, 钢, 镀锌	
方块	黄铜, 镀镍	
焊脚	黄铜, 镀锡	
塑件	PA66, UL94V-0	
电气性能		
参考标准	UL	IEC
额定电压	300V	250V
额定电流	20A	20A
使用线径	26-12AWG	2.5mm²
接触电阻	20mΩ	
绝缘电阻	500MΩ/DC500V	
耐电压	AC2000V/1Min	
机械性能		
温度范围	-40℃~+105℃	
瞬时温度	+250℃ 5秒	
扭矩	5.10kgf-cm/0.5Nm/4.43Lbin	
剥线长度	6-7mm	

MATERIAL		
Screws	M3.0 Steel Zn plated	
Cage	Brass, Ni plated	
Pin header	Brass, Sn plated	
Housing	PA66, UL94V-0	
ELECTRICAL		
Standard	UL	IEC
Rated voltage	300V	250V
Rated current	20A	20A
Wire range	26-12AWG	2.5mm²
Contact resistance	20mΩ	
Insulation resistance	500MΩ/DC500V	
Withstanding voltage	AC2000V/1Min	
MECHANICAL		
Temp. range	-40℃~+105℃	
Max. soldering	+250℃ 5 Sec	
Torque	5.10kgf-cm/0.5Nm/4.43Lbin	
Strip length	6-7mm	

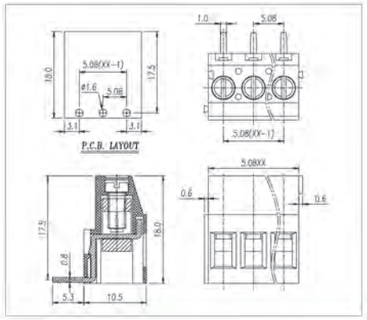

Pitch:6.35mm

MODEL:JL635V

认证/CERTIFICATION		
材质及电镀		
螺丝	M3.0, 钢, 镀锌	
方块	黄铜, 镀镍	
焊脚	黄铜, 镀锡	
塑件	PA66, UL94V-0	
电气性能		
参考标准	UL	IEC
额定电压	300V	450V
额定电流	30A	32A
使用线径	26-10AWG	4.0mm²
接触电阻	20mΩ	
绝缘电阻	500MΩ/DC500V	
耐电压	AC2000V/1Min	
机械性能		
温度范围	-40℃~+105℃	
瞬时温度	+250℃ 5秒	
扭矩	5.10kgf-cm/0.5Nm/4.43Lbin	
剥线长度	6-7mm	

MATERIAL		
Screws	M3.0 Steel Zn plated	
Cage	Brass, Ni plated	
Pin header	Brass, Sn plated	
Housing	PA66, UL94V-0	
ELECTRICAL		
Standard	UL	IEC
Rated voltage	300V	450V
Rated current	30A	32A
Wire range	26-10AWG	4.0mm²
Contact resistance	20mΩ	
Insulation resistance	500MΩ/DC500V	
Withstanding voltage	AC2000V/1Min	
MECHANICAL		
Temp. range	-40℃~+105℃	
Max. soldering	+250℃ 5 Sec	
Torque	5.10kgf-cm/0.5Nm/4.43Lbin	
Strip length	6-7mm	

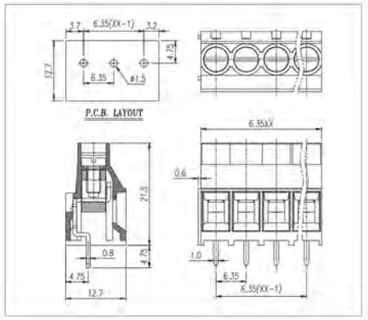

Pitch:6.35mm

MODEL:JL636V

认证/CERTIFICATION		
材质及电镀		
螺丝	M3.0, 钢,镀锌	
方块	黄铜, 镀镍	
焊脚	黄铜, 镀锡	
塑件	PA66, UL94V-0	
电气性能		
参考标准	UL	IEC
额定电压	300V	450V
额定电流	30A	32A
使用线径	26-10AWG	4.0mm²
接触电阻	20mΩ	
绝缘电阻	500MΩ/DC500V	
耐电压	AC2000V/1Min	
机械性能		
温度范围	-40℃~+105℃	
瞬时温度	+250℃ 5秒	
扭矩	5.10kgf-cm/0.5Nm/4.43Lbin	
剥线长度	6-7mm	

MATERIAL		
Screws	M3.0 Steel Zn plated	
Cage	Brass, Ni plated	
Pin header	Brass, Sn plated	
Housing	PA66, UL94V-0	
ELECTRICAL		
Standard	UL	IEC
Rated voltage	300V	450V
Rated current	30A	32A
Wire range	26-10AWG	4.0mm²
Contact resistance	20mΩ	
Insulation resistance	500MΩ/DC500V	
Withstanding voltage	AC2000V/1Min	
MECHANICAL		
Temp. range	-40℃~+105℃	
Max. soldering	+250℃ 5 Sec	
Torque	5.10kgf-cm/0.5Nm/4.43Lbin	
Strip length	6-7mm	

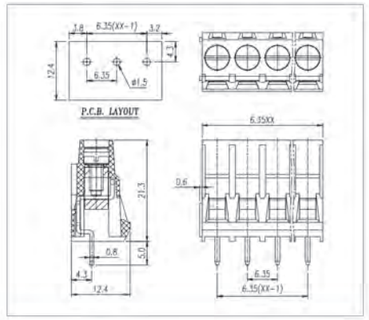

Pitch:9.5mm

MODEL:JL950V

认证/CERTIFICATION		
材质及电镀		
螺丝	M3.0, 钢, 镀锌	
方块	黄铜, 镀镍	
焊脚	黄铜, 镀锡	
塑件	PA66, UL94V-0	
电气性能		
参考标准	UL	IEC
额定电压	300V	450V
额定电流	30A	32A
使用线径	26-10AWG	4.0mm²
接触电阻	20mΩ	
绝缘电阻	500MΩ/DC500V	
耐电压	AC2000V/1Min	
机械性能		
温度范围	-40℃~+105℃	
瞬时温度	+250℃ 5秒	
扭矩	5.10kgf-cm/0.5Nm/4.43Lbin	
剥线长度	6-7mm	

MATERIAL		
Screws	M3.0 Steel Zn plated	
Cage	Brass, Ni plated	
Pin header	Brass, Sn plated	
Housing	PA66, UL94V-0	
ELECTRICAL		
Standard	UL	IEC
Rated voltage	300V	450V
Rated current	30A	32A
Wire range	26-10AWG	4.0mm²
Contact resistance	20mΩ	
Insulation resistance	500MΩ/DC500V	
Withstanding voltage	AC2000V/1Min	
MECHANICAL		
Temp. range	-40℃~+105℃	
Max. soldering	+250℃ 5 Sec	
Torque	5.10kgf-cm/0.5Nm/4.43Lbin	
Strip length	6-7mm	

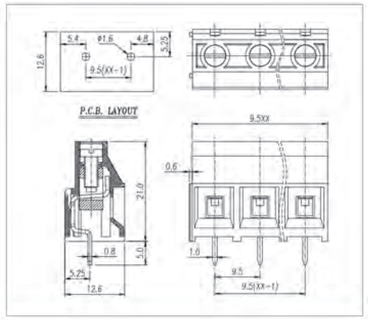

Pitch:10.16mm

MODEL:JL116V

认证/CERTIFICATION		
材质及电镀		
螺丝	M4.0, 钢, 镀锌	
方块	黄铜, 镀镍	
焊脚	黄铜, 镀锡	
塑件	PA66, UL94V-0	
电气性能		
参考标准	UL	IEC
额定电压	300V	750V
额定电流	52A	57A
使用线径	26-6AWG	10.0mm²
接触电阻	20mΩ	
绝缘电阻	500MΩ/DC500V	
耐电压	AC2000V/1Min	
机械性能		
温度范围	-40℃~+105℃	
瞬时温度	+250℃ 5秒	
扭矩	12.24kgf-cm/1.2Nm/10.53Lbin	
剥线长度	10-11mm	

MATERIAL		
Screws	M4.0 Steel Zn plated	
Cage	Brass, Ni plated	
Pin header	Brass, Sn plated	
Housing	PA66, UL94V-0	
ELECTRICAL		
Standard	UL	IEC
Rated voltage	300V	750V
Rated current	52A	57A
Wire range	26-6AWG	10.0mm²
Contact resistance	20mΩ	
Insulation resistance	500MΩ/DC500V	
Withstanding voltage	AC2000V/1Min	
MECHANICAL		
Temp. range	-40℃~+105℃	
Max. soldering	+250℃ 5 Sec	
Torque	12.24kgf-cm/1.2Nm/10.53Lbin	
Strip length	10-11mm	

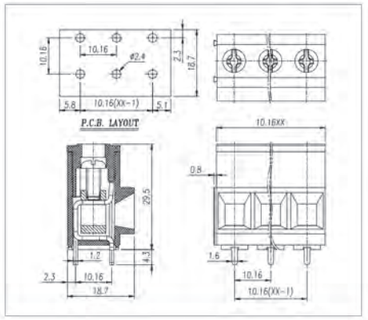

Pitch:5.0/10.0mm

MODEL:JL330

认证/CERTIFICATION		
材质及电镀		
螺丝	M2.5, 钢, 镀锌	
方块	黄铜, 镀镍	
焊脚	黄铜, 镀锡	
塑件	PA66, UL94V-0	
电气性能		
参考标准	UL	IEC
额定电压	300V	250V
额定电流	15A	24A
使用线径	22-14AWG	2.5mm²
接触电阻	20mΩ	
绝缘电阻	500MΩ/DC500V	
耐电压	AC2000V/1Min	
机械性能		
温度范围	-40℃~+105℃	
瞬时温度	+250℃ 5秒	
扭矩	4.08kgf-cm/0.4Nm/3.54Lbin	
剥线长度	6-7mm	

MATERIAL		
Screws	M2.5 Steel Zn plated	
Cage	Brass, Ni plated	
Pin header	Brass, Sn plated	
Housing	PA66, UL94V-0	
ELECTRICAL		
Standard	UL	IEC
Rated voltage	300V	250V
Rated current	15A	24A
Wire range	22-14AWG	2.5mm²
Contact resistance	20mΩ	
Insulation resistance	500MΩ/DC500V	
Withstanding voltage	AC2000V/1Min	
MECHANICAL		
Temp. range	-40℃~+105℃	
Max. soldering	+250℃ 5 Sec	
Torque	4.08kgf-cm/0.4Nm/3.54Lbin	
Strip length	6-7mm	

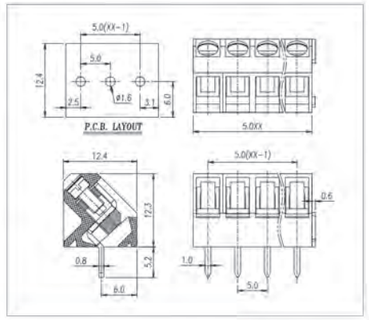

Pitch:5.0/10.0mm

MODEL:JL410

认证/CERTIFICATION		
材质及电镀		
螺丝	M3.0, 钢, 镀锌	
方块	黄铜, 镀镍	
焊脚	黄铜, 镀锡	
塑件	PA66, UL94V-0	
电气性能		
参考标准	UL	IEC
额定电压	300V	450V
额定电流	16A	24A
使用线径	26-12AWG	2.5mm²
接触电阻	20mΩ	
绝缘电阻	500MΩ/DC500V	
耐电压	AC2000V/1Min	
机械性能		
温度范围	-40℃~+105℃	
瞬时温度	+250℃ 5秒	
扭矩	5.10kgf-cm/0.5Nm/4.43Lbin	
剥线长度	7-8mm	

MATERIAL		
Screws	M3.0 Steel Zn plated	
Cage	Brass, Ni plated	
Pin header	Brass, Sn plated	
Housing	PA66, UL94V-0	
ELECTRICAL		
Standard	UL	IEC
Rated voltage	300V	450V
Rated current	16A	24A
Wire range	26-12AWG	2.5mm²
Contact resistance	20mΩ	
Insulation resistance	500MΩ/DC500V	
Withstanding voltage	AC2000V/1Min	
MECHANICAL		
Temp. range	-40℃~+105℃	
Max. soldering	+250℃ 5 Sec	
Torque	5.10kgf-cm/0.5Nm/4.43Lbin	
Strip length	7-8mm	

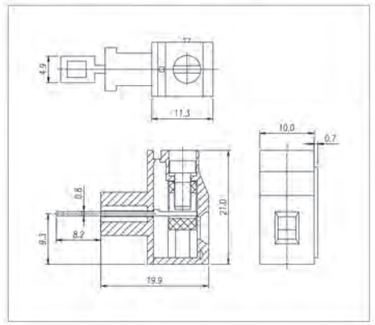

Pitch:5.0/10.0mm

MODEL:JL1010

认证/CERTIFICATION		
材质及电镀		
螺丝	M4.0, 钢, 镀锌	
方块	黄铜, 镀镍	
焊脚	黄铜, 镀锡	
塑件	PA66, UL94V-0	
电气性能		
参考标准	UL	IEC
额定电压	300V	750V
额定电流	30A	41A
使用线径	26-10AWG	6.0mm²
接触电阻	20mΩ	
绝缘电阻	500MΩ/DC500V	
耐电压	AC3000V/1Min	
机械性能		
温度范围	-40℃~+105℃	
瞬时温度	+250℃ 5秒	
扭矩	12.24kgf-cm/1.2Nm/10.53Lbin	
剥线长度	7-8mm	

MATERIAL		
Screws	M4.0 Steel Zn plated	
Cage	Brass, Ni plated	
Pin header	Brass, Sn plated	
Housing	PA66, UL94V-0	
ELECTRICAL		
Standard	UL	IEC
Rated voltage	300V	750V
Rated current	30A	41A
Wire range	26-10AWG	6.0mm²
Contact resistance	20mΩ	
Insulation resistance	500MΩ/DC500V	
Withstanding voltage	AC3000V/1Min	
MECHANICAL		
Temp. range	-40℃~+105℃	
Max. soldering	+250℃ 5 Sec	
Torque	12.24kgf-cm/1.2Nm/10.53Lbin	
Strip length	7-8mm	

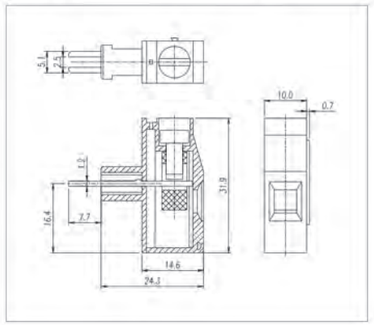

Pitch:5.08mm

MODEL:JL508V

认证/CERTIFICATION		
材质及电镀		
螺丝	M2.5, 钢, 镀锌	
方块	黄铜, 镀镍	
焊脚	黄铜, 镀锡	
塑件	PA66, UL94V-0	
电气性能		
参考标准	UL	IEC
额定电压	300V	250V
额定电流	15A	17.5A
使用线径	26-14AWG	1.5mm²
接触电阻	20mΩ	
绝缘电阻	500MΩ/DC500V	
耐电压	AC2000V/1Min	
机械性能		
温度范围	-40℃~+105℃	
瞬时温度	+250℃ 5秒	
扭矩	4.08kgf-cm/0.4Nm/3.54Lbin	
剥线长度	6-7mm	

MATERIAL		
Screws	M2.5 Steel Zn plated	
Cage	Brass, Ni plated	
Pin header	Brass, Sn plated	
Housing	PA66, UL94V-0	
ELECTRICAL		
Standard	UL	IEC
Rated voltage	300V	250V
Rated current	15A	17.5A
Wire range	26-14AWG	1.5mm²
Contact resistance	20mΩ	
Insulation resistance	500MΩ/DC500V	
Withstanding voltage	AC2000V/1Min	
MECHANICAL		
Temp. range	-40℃~+105℃	
Max. soldering	+250℃ 5 Sec	
Torque	4.08kgf-cm/0.4Nm/3.54Lbin	
Strip length	6-7mm	

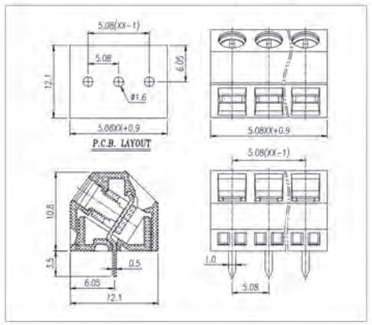

Pitch:5.0/10.0mm

MODEL:JL500A

认证/CERTIFICATION		
材质及电镀		
螺丝	M2.5, 钢, 镀锌	
方块	黄铜, 镀镍	
长/短焊脚	黄铜, 镀锡	
塑件	PA66, UL94V-0	
电气性能		
参考标准	UL	IEC
额定电压	300V	250V
额定电流	15A	17.5A
使用线径	26-14AWG	1.5mm²
接触电阻	20mΩ	
绝缘电阻	500MΩ/DC500V	
耐电压	AC2000V/1Min	
机械性能		
温度范围	-40℃~+105℃	
瞬时温度	+250℃ 5秒	
扭矩	4.08kgf-cm/0.4Nm/3.54Lbin	
剥线长度	6-7mm	

MATERIAL		
Screws	M2.5 Steel Zn plated	
Cage	Brass, Ni plated	
Pin header	Brass, Sn plated	
Housing	PA66, UL94V-0	
ELECTRICAL		
Standard	UL	IEC
Rated voltage	300V	250V
Rated current	15A	17.5A
Wire range	26-14AWG	1.5mm²
Contact resistance	20mΩ	
Insulation resistance	500MΩ/DC500V	
Withstanding voltage	AC2000V/1Min	
MECHANICAL		
Temp. range	-40℃~+105℃	
Max. soldering	+250℃ 5 Sec	
Torque	4.08kgf-cm/0.4Nm/3.54Lbin	
Strip length	6-7mm	

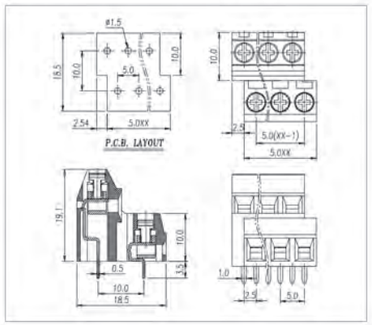

Pitch:3.5/3.81mm

MODEL:JL350D

认证/CERTIFICATION		
材质及电镀		
螺丝	M2.0, 钢, 镀锌	
方块	磷青铜, 镀镍	
焊脚	黄铜, 镀锡	
塑件	PA66, UL94V-0	
电气性能		
参考标准	UL	IEC
额定电压	300V	250V
额定电流	10A	13.5A
使用线径	30-16AWG	1mm²
接触电阻	20mΩ	
绝缘电阻	500MΩ/DC500V	
耐电压	AC2000V/1Min	
机械性能		
温度范围	-40℃~+105℃	
瞬时温度	+250℃ 5秒	
扭矩	2.04kgf-cm/0.2Nm/1.77Lbin	
剥线长度	5-6mm	

MATERIAL		
Screws	M2.0 Steel Zn plated	
Cage	Phosphor bronze, Ni plated	
Pin header	Brass, Sn plated	
Housing	PA66, UL94V-0	
ELECTRICAL		
Standard	UL	IEC
Rated voltage	300V	250V
Rated current	10A	13.5A
Wire range	30-16AWG	1mm²
Contact resistance	20mΩ	
Insulation resistance	500MΩ/DC500V	
Withstanding voltage	AC2000V/1Min	
MECHANICAL		
Temp. range	-40℃~+105℃	
Max. soldering	+250℃ 5 Sec	
Torque	2.04kgf-cm/0.2Nm/1.77Lbin	
Strip length	5-6mm	

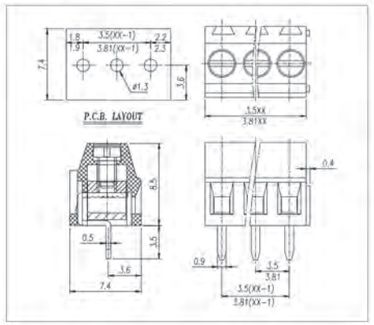

Pitch:3.5/3.81mm

MODEL:JL350H

认证/CERTIFICATION		
材质及电镀		
螺丝	M2.0, 钢, 镀锌	
方块	磷青铜, 镀镍	
焊脚	黄铜, 镀锡	
塑件	PA66, UL94V-0	
电气性能		
参考标准	UL	IEC
额定电压	300V	250V
额定电流	10A	13.5A
使用线径	30-16AWG	1mm²
接触电阻	20mΩ	
绝缘电阻	500MΩ/DC500V	
耐电压	AC2000V/1Min	
机械性能		
温度范围	-40℃~+105℃	
瞬时温度	+250℃ 5秒	
扭矩	2.04kgf-cm/0.2Nm/1.77Lbin	
剥线长度	5-6mm	

MATERIAL		
Screws	M2.0 Steel Zn plated	
Cage	Phosphor bronze, Ni plated	
Pin header	Brass, Sn plated	
Housing	PA66, UL94V-0	
ELECTRICAL		
Standard	UL	IEC
Rated voltage	300V	250V
Rated current	10A	13.5A
Wire range	30-16AWG	1mm²
Contact resistance	20mΩ	
Insulation resistance	500MΩ/DC500V	
Withstanding voltage	AC2000V/1Min	
MECHANICAL		
Temp. range	-40℃~+105℃	
Max. soldering	+250℃ 5 Sec	
Torque	2.04kgf-cm/0.2Nm/1.77Lbin	
Strip length	5-6mm	

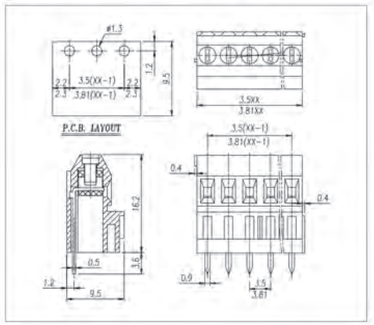

Pitch:3.5/3.81mm

MODEL:JL350A

认证/CERTIFICATION	
材质及电镀	
螺丝	M2.0, 钢, 镀锌
方块	磷青铜, 镀镍
长/短焊脚	黄铜, 镀锡
塑件	PA66, UL94V-0
电气性能	
参考标准	UL / IEC
额定电压	300V / 250V
额定电流	10A / 13.5A
使用线径	30-16AWG / 1mm²
接触电阻	20mΩ
绝缘电阻	500MΩ/DC500V
耐电压	AC2000V/1Min
机械性能	
温度范围	-40℃~+105℃
瞬时温度	+250℃ 5秒
扭矩	2.04kgf-cm/0.2Nm/1.77Lbin
剥线长度	5-6mm

MATERIAL	
Screws	M2.0 Steel Zn plated
Cage	Phosphor bronze, Ni plated
Pin header	Brass, Sn plated
Housing	PA66, UL94V-0
ELECTRICAL	
Standard	UL / IEC
Rated voltage	300V / 250V
Rated current	10A / 13.5A
Wire range	30-16AWG / 1mm²
Contact resistance	20mΩ
Insulation resistance	500MΩ/DC500V
Withstanding voltage	AC2000V/1Min
MECHANICAL	
Temp. range	-40℃~+105℃
Max. soldering	+250℃ 5 Sec
Torque	2.04kgf-cm/0.2Nm/1.77Lbin
Strip length	5-6mm

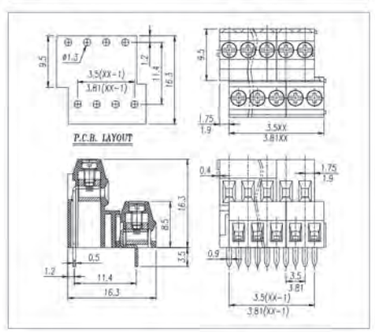

Pitch:3.5/3.81mm

MODEL:JL350B

认证/CERTIFICATION	
材质及电镀	
螺丝	M2.0, 钢, 镀锌
方块	磷青铜, 镀镍
焊脚	黄铜, 镀锡
塑件	PA66, UL94V-0
电气性能	
参考标准	UL / IEC
额定电压	300V / 250V
额定电流	10A / 13.5A
使用线径	30-16AWG / 1mm²
接触电阻	20mΩ
绝缘电阻	500MΩ/DC500V
耐电压	AC2000V/1Min
机械性能	
温度范围	-40℃~+105℃
瞬时温度	+250℃ 5秒
扭矩	2.04kgf-cm/0.2Nm/1.77Lbin
剥线长度	5-6mm

MATERIAL	
Screws	M2.0 Steel Zn plated
Cage	Phosphor bronze, Ni plated
Pin header	Brass, Sn plated
Housing	PA66, UL94V-0
ELECTRICAL	
Standard	UL / IEC
Rated voltage	300V / 250V
Rated current	10A / 13.5A
Wire range	30-16AWG / 1mm²
Contact resistance	20mΩ
Insulation resistance	500MΩ/DC500V
Withstanding voltage	AC2000V/1Min
MECHANICAL	
Temp. range	-40℃~+105℃
Max. soldering	+250℃ 5 Sec
Torque	2.04kgf-cm/0.2Nm/1.77Lbin
Strip length	5-6mm

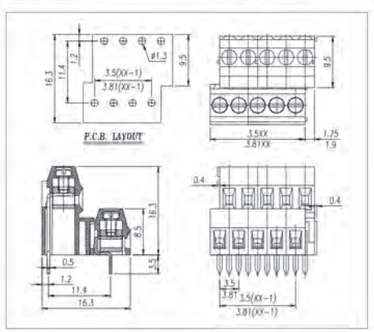

Pitch:5.0/5.08mm

MODEL:JL500D

认证/CERTIFICATION	
材质及电镀	
螺丝	M2.5, 钢, 镀锌
方块	黄铜, 镀镍
焊脚	黄铜, 镀锡
塑件	PA66, UL94V-0
电气性能	
参考标准	UL / IEC
额定电压	300V / 250V
额定电流	15A / 18A
使用线径	30-14AWG / 2.5mm²
接触电阻	20mΩ
绝缘电阻	500MΩ/DC500V
耐电压	AC2000V/1Min
机械性能	
温度范围	-40℃~+105℃
瞬时温度	+250℃ 5秒
扭矩	4.08kgf-cm/0.4Nm/3.54Lbin
剥线长度	6-7mm

MATERIAL	
Screws	M2.5 Steel Zn plated
Cage	Brass, Ni plated
Pin header	Brass, Sn plated
Housing	PA66, UL94V-0
ELECTRICAL	
Standard	UL / IEC
Rated voltage	300V / 250V
Rated current	15A / 18A
Wire range	30-14AWG / 2.5mm²
Contact resistance	20mΩ
Insulation resistance	500MΩ/DC500V
Withstanding voltage	AC2000V/1Min
MECHANICAL	
Temp. range	-40℃~+105℃
Max. soldering	+250℃ 5 Sec
Torque	4.08kgf-cm/0.4Nm/3.54Lbin
Strip length	6-7mm

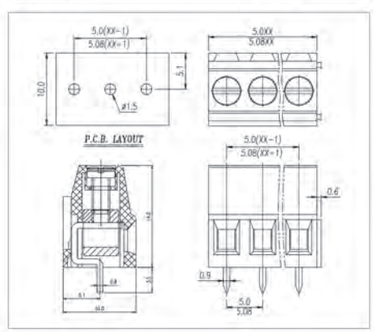

Pitch:5.0/5.08mm

MODEL:JL500H

认证/CERTIFICATION	
材质及电镀	
螺丝	M2.5, 钢, 镀锌
方块	黄铜, 镀镍
焊脚	黄铜, 镀锡
塑件	PA66, UL94V-0
电气性能	
参考标准	UL / IEC
额定电压	300V / 250V
额定电流	15A / 18A
使用线径	30-14AWG / 2.5mm²
接触电阻	20mΩ
绝缘电阻	500MΩ/DC500V
耐电压	AC2000V/1Min
机械性能	
温度范围	-40℃~+105℃
瞬时温度	+250℃ 5秒
扭矩	4.08kgf-cm/0.4Nm/3.54Lbin
剥线长度	6-7mm

MATERIAL	
Screws	M2.5 Steel Zn plated
Cage	Brass, Ni plated
Pin header	Brass, Sn plated
Housing	PA66, UL94V-0
ELECTRICAL	
Standard	UL / IEC
Rated voltage	300V / 250V
Rated current	15A / 18A
Wire range	30-14AWG / 2.5mm²
Contact resistance	20mΩ
Insulation resistance	500MΩ/DC500V
Withstanding voltage	AC2000V/1Min
MECHANICAL	
Temp. range	-40℃~+105℃
Max. soldering	+250℃ 5 Sec
Torque	4.08kgf-cm/0.4Nm/3.54Lbin
Strip length	6-7mm

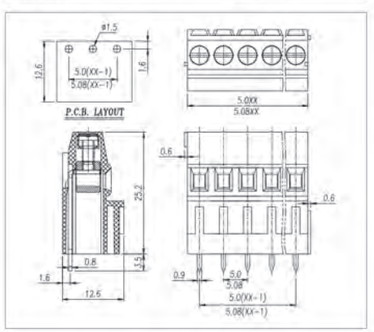

Pitch:5.0/5.08mm

MODEL:JL500HH

认证/CERTIFICATION
材质及电镀
螺丝 M2.5, 钢, 镀锌
方块 黄铜, 镀镍
焊脚 黄铜, 镀锡
塑件 PA66, UL94V-0
电气性能
参考标准 UL / IEC
额定电压 300V / 250V
额定电流 15A / 18A
使用线径 30-14AWG / 2.5mm²
接触电阻 20mΩ
绝缘电阻 500MΩ/DC500V
耐电压 AC2000V/1Min
机械性能
温度范围 -40℃~+105℃
瞬时温度 +250℃ 5秒
扭矩 4.08kgf-cm/0.4Nm/3.54Lbin
剥线长度 6-7mm

MATERIAL	
Screws	M2.5 Steel Zn plated
Cage	Brass, Ni plated
Pin header	Brass, Sn plated
Housing	PA66, UL94V-0
ELECTRICAL	
Standard	UL / IEC
Rated voltage	300V / 250V
Rated current	15A / 18A
Wire range	30-14AWG / 2.5mm²
Contact resistance	20mΩ
Insulation resistance	500MΩ/DC500V
Withstanding voltage	AC2000V/1Min
MECHANICAL	
Temp. range	-40℃~+105℃
Max. soldering	+250℃ 5 Sec
Torque	4.08kgf-cm/0.4Nm/3.54Lbin
Strip length	6-7mm

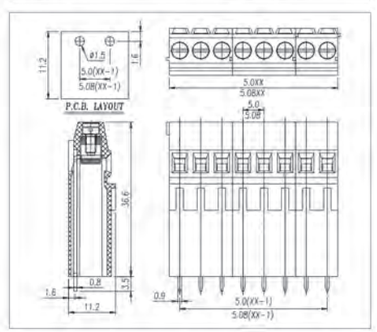

Pitch:5.0/5.08mm

MODEL:JL500B

认证/CERTIFICATION	
材质及电镀	
螺丝	M2.5, 钢, 镀锌
方块	黄铜, 镀镍
长/短焊脚	黄铜, 镀锡
塑件	PA66, UL94V-0
电气性能	
参考标准	UL / IEC
额定电压	300V / 250V
额定电流	15A / 18A
使用线径	30-14AWG / 2.5mm²
接触电阻	20mΩ
绝缘电阻	500MΩ/DC500V
耐电压	AC2000V/1Min
机械性能	
温度范围	-40℃~+105℃
瞬时温度	+250℃ 5秒
扭矩	4.08kgf-cm/0.4Nm/3.54Lbin
剥线长度	6-7mm

MATERIAL	
Screws	M2.5 Steel Zn plated
Cage	Brass, Ni plated
Pin header	Brass, Sn plated
Housing	PA66, UL94V-0
ELECTRICAL	
Standard	UL / IEC
Rated voltage	300V / 250V
Rated current	15A / 18A
Wire range	30-14AWG / 2.5mm²
Contact resistance	20mΩ
Insulation resistance	500MΩ/DC500V
Withstanding voltage	AC2000V/1Min
MECHANICAL	
Temp. range	-40℃~+105℃
Max. soldering	+250℃ 5 Sec
Torque	4.08kgf-cm/0.4Nm/3.54Lbin
Strip length	6-7mm

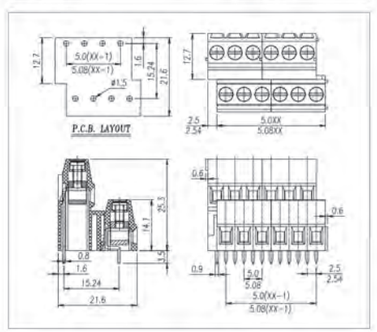

Pitch:5.0/5.08mm

MODEL:JL500B

认证/CERTIFICATION		
材质及电镀		
螺丝	M2.5, 钢, 镀锌	
方块	黄铜, 镀镍	
焊脚	黄铜, 镀锡	
塑件	PA66, UL94V-0	
电气性能		
参考标准	UL	IEC
额定电压	300V	250V
额定电流	15A	18A
使用线径	30-14AWG	2.5mm²
接触电阻	20mΩ	
绝缘电阻	500MΩ/DC500V	
耐电压	AC2000V/1Min	
机械性能		
温度范围	-40℃~+105℃	
瞬时温度	+250℃ 5秒	
扭矩	4.08kgf-cm/0.4Nm/3.54Lbin	
剥线长度	6-7mm	

MATERIAL		
Screws	M2.5 Steel Zn plated	
Cage	Brass, Ni plated	
Pin header	Brass, Sn plated	
Housing	PA66, UL94V-0	
ELECTRICAL		
Standard	UL	IEC
Rated voltage	300V	250V
Rated current	15A	18A
Wire range	30-14AWG	2.5mm²
Contact resistance	20mΩ	
Insulation resistance	500MΩ/DC500V	
Withstanding voltage	AC2000V/1Min	
MECHANICAL		
Temp. range	-40℃~+105℃	
Max. soldering	+250℃ 5 Sec	
Torque	4.08kgf-cm/0.4Nm/3.54Lbin	
Strip length	6-7mm	

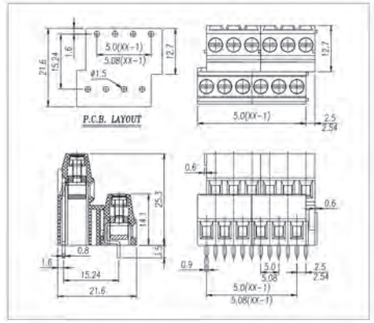

Pitch:5.0/5.08mm

MODEL:JL500AH

认证/CERTIFICATION		
材质及电镀		
螺丝	M2.5, 钢, 镀锌	
方块	黄铜, 镀镍	
焊脚	黄铜, 镀锡	
塑件	PA66, UL94V-0	
电气性能		
参考标准	UL	IEC
额定电压	300V	250V
额定电流	15A	18A
使用线径	30-14AWG	2.5mm²
接触电阻	20mΩ	
绝缘电阻	500MΩ/DC500V	
耐电压	AC2000V/1Min	
机械性能		
温度范围	-40℃~+105℃	
瞬时温度	+250℃ 5秒	
扭矩	4.08kgf-cm/0.4Nm/3.54Lbin	
剥线长度	6-7mm	

MATERIAL		
Screws	M2.5 Steel Zn plated	
Cage	Brass, Ni plated	
Pin header	Brass, Sn plated	
Housing	PA66, UL94V-0	
ELECTRICAL		
Standard	UL	IEC
Rated voltage	300V	250V
Rated current	15A	18A
Wire range	30-14AWG	2.5mm²
Contact resistance	20mΩ	
Insulation resistance	500MΩ/DC500V	
Withstanding voltage	AC2000V/1Min	
MECHANICAL		
Temp. range	-40℃~+105℃	
Max. soldering	+250℃ 5 Sec	
Torque	4.08kgf-cm/0.4Nm/3.54Lbin	
Strip length	6-7mm	

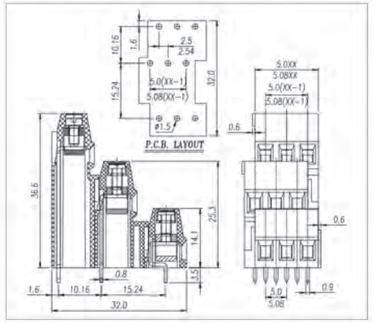

Pitch:5.0/5.08mm

MODEL:JL500BH

认证/CERTIFICATION		
材质及电镀		
螺丝	M2.5, 钢, 镀锌	
方块	黄铜, 镀镍	
焊脚	黄铜, 镀锡	
塑件	PA66, UL94V-0	
电气性能		
参考标准	UL	IEC
额定电压	300V	250V
额定电流	15A	18A
使用线径	30-14AWG	2.5mm²
接触电阻	20mΩ	
绝缘电阻	500MΩ/DC500V	
耐电压	AC2000V/1Min	
机械性能		
温度范围	-40℃~+105℃	
瞬时温度	+250℃ 5秒	
扭矩	4.08kgf-cm/0.4Nm/3.54Lbin	
剥线长度	6-7mm	

MATERIAL		
Screws	M2.5 Steel Zn plated	
Cage	Brass, Ni plated	
Pin header	Brass, Sn plated	
Housing	PA66, UL94V-0	
ELECTRICAL		
Standard	UL	IEC
Rated voltage	300V	250V
Rated current	15A	18A
Wire range	30-14AWG	2.5mm²
Contact resistance	20mΩ	
Insulation resistance	500MΩ/DC500V	
Withstanding voltage	AC2000V/1Min	
MECHANICAL		
Temp. range	-40℃~+105℃	
Max. soldering	+250℃ 5 Sec	
Torque	4.08kgf-cm/0.4Nm/3.54Lbin	
Strip length	6-7mm	

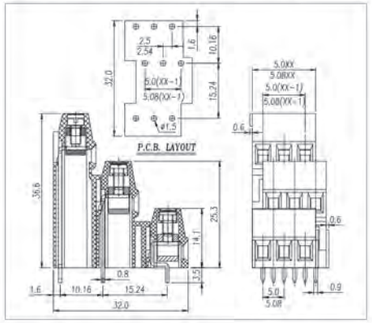

Pitch:5.0mm

MODEL:JL105R

认证/CERTIFICATION		
材质及电镀		
螺丝	M2.5, 钢, 镀锌	
方块	黄铜, 镀镍	
焊脚	黄铜, 镀锡	
滑块	钢, 镀三价铬	
塑件	PA66, UL94V-0	
电气性能		
参考标准	UL	IEC
额定电压	300V	450V
额定电流	20A	24A
使用线径	24-12AWG	2.5mm²
接触电阻	20mΩ	
绝缘电阻	500MΩ/DC500V	
耐电压	AC2000V/1Min	
机械性能		
温度范围	-40℃~+105℃	
瞬时温度	+250℃ 5秒	
扭矩	4.08kgf-cm/0.4Nm/3.54Lbin	
剥线长度	12-13mm	

MATERIAL		
Screws	M2.5 Steel Zn plated	
Cage	Brass, Ni plated	
Pin header	Brass, Sn plated	
Cage	Steel Cr³⁺ Zn plated	
Housing	PA66, UL94V-0	
ELECTRICAL		
Standard	UL	IEC
Rated voltage	300V	450V
Rated current	20A	24A
Wire range	24-12AWG	2.5mm²
Contact resistance	20mΩ	
Insulation resistance	500MΩ/DC500V	
Withstanding voltage	AC2000V/1Min	
MECHANICAL		
Temp. range	-40℃~+105℃	
Max. soldering	+250℃ 5 Sec	
Torque	4.08kgf-cm/0.4Nm/3.54Lbin	
Strip length	12-13mm	

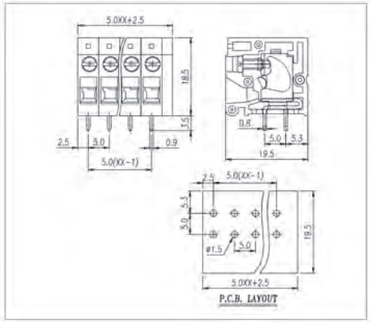

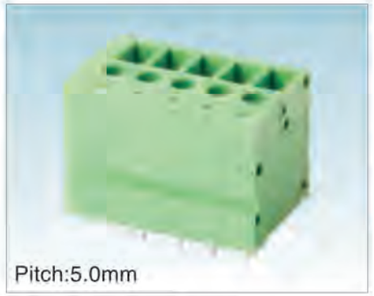
Pitch:5.0mm

MODEL:JL105V

认证/CERTIFICATION		
材质及电镀		
螺丝	M2.5, 钢, 镀锌	
方块	黄铜, 镀镍	
焊脚	黄铜, 镀锡	
滑块	钢, 镀三价铬	
塑件	PA66, UL94V-0	
电气性能		
参考标准	UL	IEC
额定电压	300V	450V
额定电流	20A	24A
使用线径	24-12AWG	2.5mm²
接触电阻	20mΩ	
绝缘电阻	500MΩ/DC500V	
耐电压	AC2000V/1Min	
机械性能		
温度范围	-40℃~+105℃	
瞬时温度	+250℃ 5秒	
扭矩	4.08kgf-cm/0.4Nm/3.54Lbin	
剥线长度	12-13mm	

MATERIAL		
Screws	M2.5 Steel Zn plated	
Cage	Brass, Ni plated	
Pin header	Brass, Sn plated	
Cage	Steel Cr³⁺ Zn plated	
Housing	PA66, UL94V-0	
ELECTRICAL		
Standard	UL	IEC
Rated voltage	300V	450V
Rated current	20A	24A
Wire range	24-12AWG	2.5mm²
Contact resistance	20mΩ	
Insulation resistance	500MΩ/DC500V	
Withstanding voltage	AC2000V/1Min	
MECHANICAL		
Temp. range	-40℃~+105℃	
Max. soldering	+250℃ 5 Sec	
Torque	4.08kgf-cm/0.4Nm/3.54Lbin	
Strip length	12-13mm	

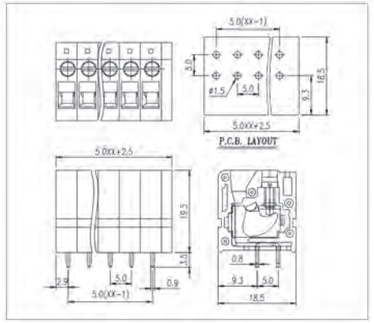

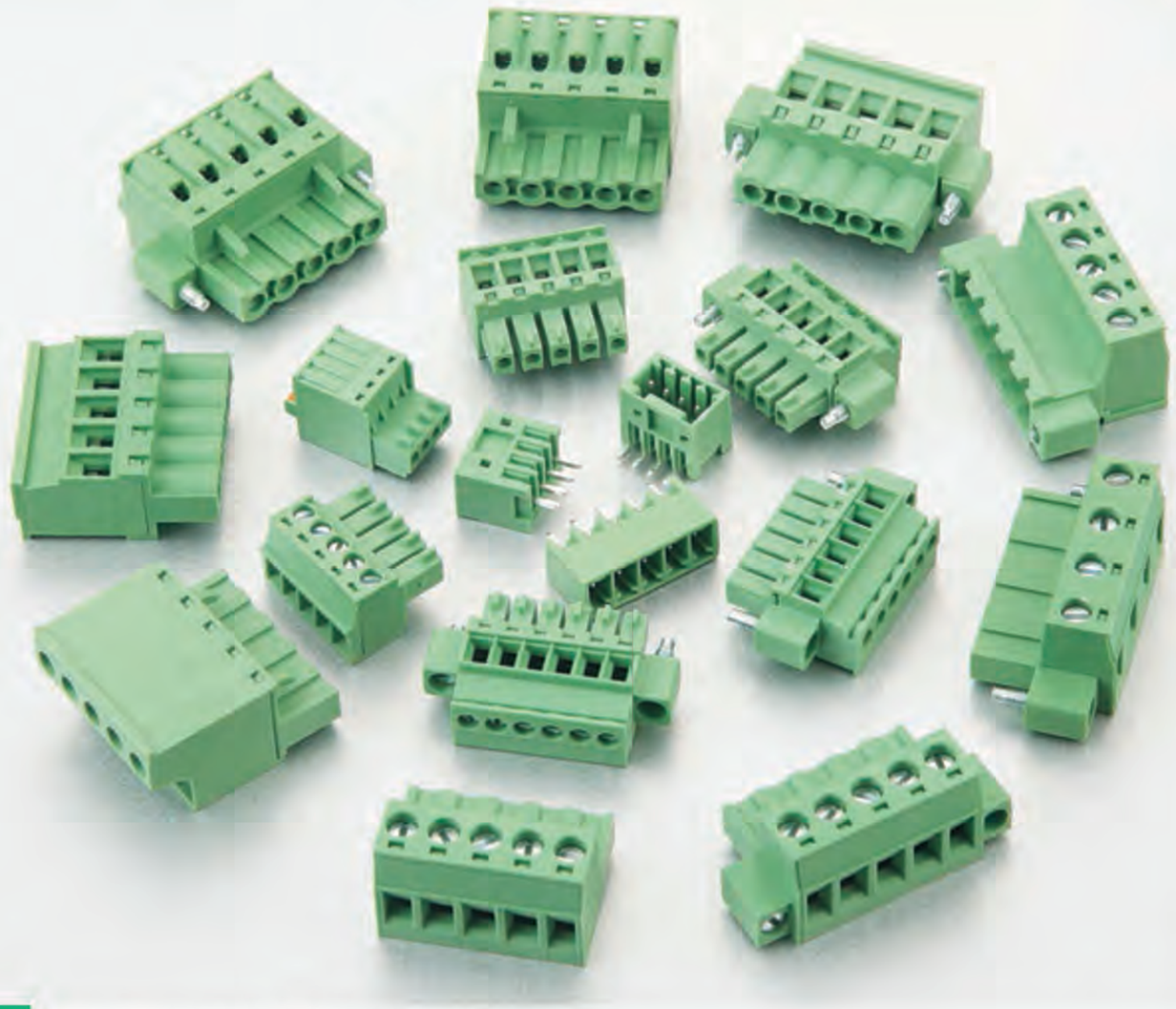

插拔式接线端子
PLUG-IN TERMINAL BLOCK

插拔式接线端子，可以连接截面为0.08mm²至10mm²的所有类型的导线，间距2.5mm至15.24mm可供选择，可根据需要选择进线方向，连接方向，插拔方向。产品设计符合IEC60998、IEC61984、UL1059、UL486E、CSA C22.2 No.158等国际标准。

Plug-in terminal blocks, provide the wire size from 0.08mm² to 10mm². Available with different pitches from 2.54mm to 15.24mm.Choosing insert direction, contact direction, Plug-in direction according to requests. The product is designed in accordance with IEC 60998, UL1059, CSA C22.2 NO.158 standards.

Pitch:2.5mm

MODEL:JL15EDGKD-2.5

认证/CERTIFICATION		
材质及电镀		
夹子	磷青铜, 镀镍	
弹片	不锈钢	
塑件	PA66, UL94V-0	
电气性能		
参考标准	UL	IEC
额定电压	150V	130V
额定电流	5A	6A
使用线径	26~20AWG	0.5mm²
接触电阻	20mΩ	
绝缘电阻	500MΩ/DC500V	
耐电压	AC1500V/1Min	
机械性能		
温度范围	-40℃~+105℃	
剥线长度	7-8mm	

MATERIAL		
Clamp	Phosphor bronze, Ni plated	
Shrapnel	Stainless Steel	
Housing	PA66, UL94V-0	
ELECTRICAL		
Standard	UL	IEC
Rated voltage	150V	130V
Rated current	5A	6A
Wire range	26~20AWG	0.5mm²
Contact resistance	20mΩ	
Insulation resistance	500MΩ/DC500V	
Withstanding voltage	AC1500V/1Min	
MECHANICAL		
Temp. range	-40℃~+120℃	
Strip length	7~8mm	

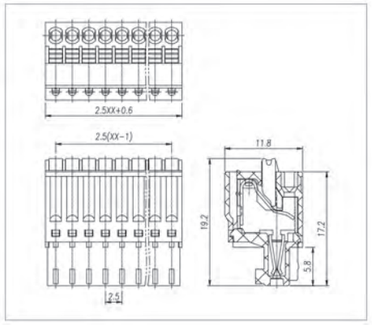

Pitch:2.5mm

MODEL:JL15EDGVC-2.5

认证/CERTIFICATION		
材质及电镀		
焊针	黄铜, 镀锡	
塑件	PA66, UL94V-0	
电气性能		
参考标准	UL	IEC
额定电压	150V	130V
额定电流	5A	6A
接触电阻	20mΩ	
绝缘电阻	500MΩ/DC500V	
耐电压	AC1500V/1Min	
机械性能		
温度范围	-40℃~+105℃	
瞬时温度	+250℃ 5秒	

MATERIAL		
Pin header	Brass, Sn plated	
Housing	PA66, UL94V-0	
ELECTRICAL		
Standard	UL	IEC
Rated voltage	150V	130V
Rated current	5A	6A
Contact resistance	20mΩ	
Insulation resistance	500MΩ/DC500V	
Withstanding voltage	AC1500V/1Min	
MECHANICAL		
Temp. range	-40℃~+105℃	
Max. soldering	+250℃ for 5 Sec	

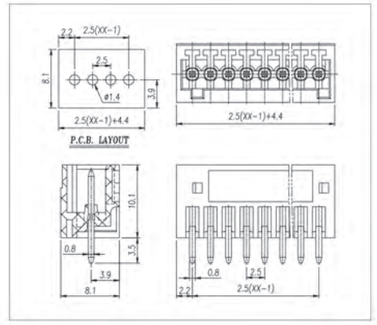

Pitch:2.5mm

MODEL:JL15EDGRC-2.5

认证/CERTIFICATION		
材质及电镀		
焊针	黄铜, 镀锡	
塑件	PA66, UL94V-0	
电气性能		
参考标准	UL	IEC
额定电压	150V	130V
额定电流	5A	6A
接触电阻	20mΩ	
绝缘电阻	500MΩ/DC500V	
耐电压	AC1500V/1Min	
机械性能		
温度范围	-40℃~+105℃	
瞬时温度	+250℃ 5秒	

MATERIAL		
Pin header	Brass, Sn plated	
Housing	PA66, UL94V-0	
ELECTRICAL		
Standard	UL	IEC
Rated voltage	150V	130V
Rated current	5A	6A
Contact resistance	20mΩ	
Insulation resistance	500MΩ/DC500V	
Withstanding voltage	AC1500V/1Min	
MECHANICAL		
Temp. range	-40℃~+105℃	
Max. soldering	+250℃ for 5 Sec	

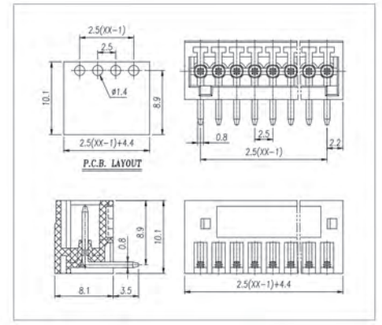

Pitch:2.5mm

MODEL:JL15EDGVH-2.5

认证/CERTIFICATION

材质及电镀		
焊针	黄铜, 镀锡	
塑件	PA66, UL94V-0	
电气性能		
参考标准	UL	IEC
额定电压	150V	130V
额定电流	5A	6A
接触电阻	20mΩ	
绝缘电阻	500MΩ/DC500V	
耐电压	AC1500V/1Min	
机械性能		
温度范围	-40℃~+105℃	
瞬时温度	+250℃ 5秒	

MATERIAL		
Pin header	Brass, Sn plated	
Housing	PA66, UL94V-0	
ELECTRICAL		
Standard	UL	IEC
Rated voltage	150V	130V
Rated current	5A	6A
Contact resistance	20mΩ	
Insulation resistance	500MΩ/DC500V	
Withstanding voltage	AC1500V/1Min	
MECHANICAL		
Temp. range	-40℃~+105℃	
Max. soldering	+250℃ for 5 Sec	

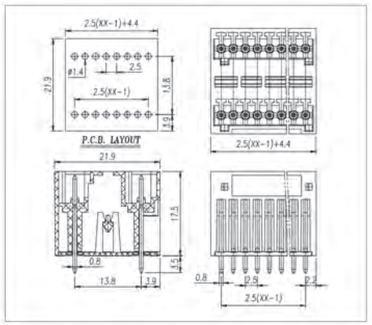

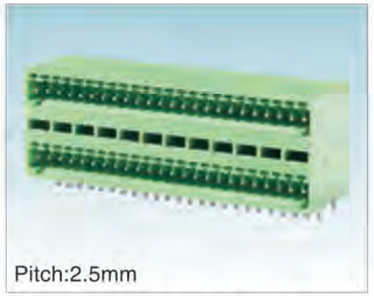

Pitch:2.5mm

MODEL:JL15EDGRH-2.5

认证/CERTIFICATION

材质及电镀		
焊针	黄铜, 镀锡	
塑件	PA66, UL94V-0	
电气性能		
参考标准	UL	IEC
额定电压	150V	130V
额定电流	5A	6A
接触电阻	20mΩ	
绝缘电阻	500MΩ/DC500V	
耐电压	AC1500V/1Min	
机械性能		
温度范围	-40℃~+105℃	
瞬时温度	+250℃ 5秒	

MATERIAL		
Pin header	Brass, Sn plated	
Housing	PA66, UL94V-0	
ELECTRICAL		
Standard	UL	IEC
Rated voltage	150V	130V
Rated current	5A	17.5A
Contact resistance	20mΩ	
Insulation resistance	500MΩ/DC500V	
Withstanding voltage	AC1500V/1Min	
MECHANICAL		
Temp. range	-40℃~+105℃	
Max. soldering	+250℃ for 5 Sec	

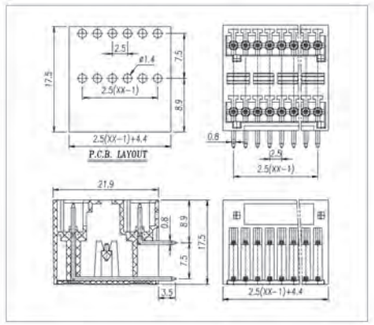

Pitch:3.5mm

MODEL:JL15EDGKN-3.5

认证/CERTIFICATION

材质及电镀		
夹子	磷青铜, 镀镍	
弹片	不锈钢	
塑件	PA66, UL94V-0	
电气性能		
参考标准	UL	IEC
额定电压	300V	250V
额定电流	8A	10A
使用线径	24~16AWG	1.0mm²
接触电阻	20mΩ	
绝缘电阻	500MΩ/DC500V	
耐电压	AC2000V/1Min	
机械性能		
温度范围	-40℃~+105℃	
剥线长度	9~10mm	

MATERIAL		
Clamp	Phosphor bronze, Ni plated.	
Shrapnel	Stainless steel	
Housing	PA66, UL94V-0	
ELECTRICAL		
Standard	UL	IEC
Rated voltage	300V	250V
Rated current	8A	10A
Wire range	24~16AWG	1.0mm²
Contact resistance	20mΩ	
Insulation resistance	500MΩ/DC500V	
Withstanding voltage	AC2000V/1Min	
MECHANICAL		
Temp. range	-40℃~+105℃	
Strip length	9~10mm	

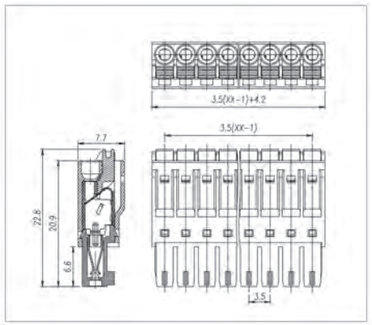

Pitch:3.5mm

MODEL:JL15EDGKNG-3.5

认证/CERTIFICATION

材质及电镀		
夹子	磷青铜, 镀镍	
弹片	不锈钢	
塑件	PA66, UL94V-0	
电气性能		
参考标准	UL	IEC
额定电压	300V	250V
额定电流	8A	10A
使用线径	24~16AWG	1.0mm²
接触电阻	20mΩ	
绝缘电阻	500MΩ/DC500V	
耐电压	AC2000V/1Min	
机械性能		
温度范围	-40℃~+105℃	
剥线长度	9~10mm	

MATERIAL		
Clamp	Phosphor bronze, Ni plated	
Shrapnel	Stainless steel	
Housing	PA66, UL94V-0	
ELECTRICAL		
Standard	UL	IEC
Rated voltage	300V	250V
Rated current	8A	10A
Wire range	24~16AWG	1.0mm²
Contact resistance	20mΩ	
Insulation resistance	500MΩ/DC500V	
Withstanding voltage	AC2000V/1Min	
MECHANICAL		
Temp. range	-40℃~+105℃	
Strip length	9~10mm	

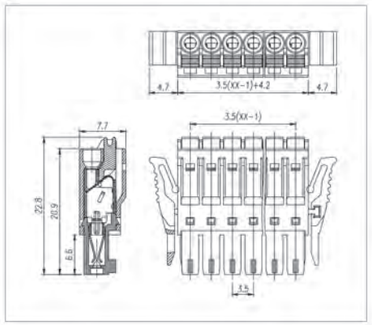

Pitch:3.5mm

MODEL:JL15EDGKNM-3.5

认证/CERTIFICATION

材质及电镀		
夹子	磷青铜, 镀镍	
弹片	不锈钢	
塑件	PA66, UL94V-0	
电气性能		
参考标准	UL	IEC
额定电压	300V	250V
额定电流	8A	10A
使用线径	24~16AWG	1.0mm²
接触电阻	20mΩ	
绝缘电阻	500MΩ/DC500V	
耐电压	AC2000V/1Min	
机械性能		
温度范围	-40℃~+105℃	
剥线长度	9~10mm	

MATERIAL		
Clamp	Phosphor bronze, Ni plated	
Shrapnel	Stainless steel	
Housing	PA66, UL94V-0	
ELECTRICAL		
Standard	UL	IEC
Rated voltage	300V	250V
Rated current	8A	10A
Wire range	24~16AWG	1.0mm²
Contact resistance	20mΩ	
Insulation resistance	500MΩ/DC500V	
Withstanding voltage	AC2000V/1Min	
MECHANICAL		
Temp. range	-40℃~+105℃	
Strip length	9~10mm	

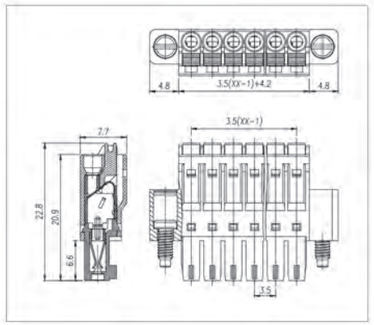

Pitch:3.5mm

MODEL:JL15EDGVHB-3.5

认证/CERTIFICATION

材质及电镀		
螺母	M2.5, 黄铜	
焊针	黄铜, 镀锡	
塑件	LCP, UL94V-0	
电气性能		
参考标准	UL	IEC
额定电压	300V	250V
额定电流	8A	10A
接触电阻	20mΩ	
绝缘电阻	500MΩ/DC500V	
耐电压	AC2000V/1Min	
机械性能		
温度范围	-40℃~+130℃	
瞬时温度	+285℃ 10秒	

MATERIAL		
Nut	M2.5, Brass	
Pin header	Brass, Sn plated	
Housing	PA66, UL94V-0	
ELECTRICAL		
Standard	UL	IEC
Rated voltage	300V	250V
Rated current	8A	10A
Contact resistance	20mΩ	
Insulation resistance	500MΩ/DC500V	
Withstanding voltage	AC2000V/1Min	
MECHANICAL		
Temp. range	-40℃~+130℃	
Max Soldering	+285℃ for 10 Sec	

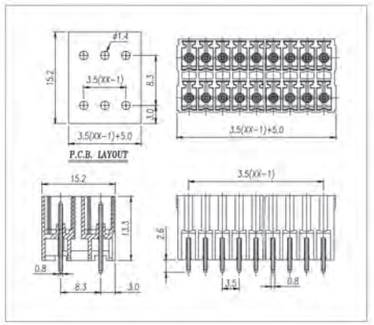

MODEL:JL15EDGRHB-3.5

认证/CERTIFICATION

材质及电镀		
螺母	M2.5, 黄铜	
焊针	黄铜, 镀锡	
塑件	LCP, UL94V-0	
电气性能		
参考标准	UL	IEC
额定电压	300V	250V
额定电流	8A	10A
接触电阻	20mΩ	
绝缘电阻	500MΩ/DC500V	
耐电压	AC2000V/1Min	
机械性能		
温度范围	-40℃~+130℃	
瞬时温度	+285℃ 10秒	

MATERIAL		
Nut	M2.5, Brass	
Pin header	Brass, Sn plated	
Housing	PA66, UL94V-0	
ELECTRICAL		
Standard	UL	IEC
Rated voltage	300V	250V
Rated current	8A	10A
Contact resistance	20mΩ	
Insulation resistance	500MΩ/DC500V	
Withstanding voltage	AC2000V/1Min	
MECHANICAL		
Temp. range	-40℃~+130℃	
Max Soldering	+285℃ for 10 Sec	

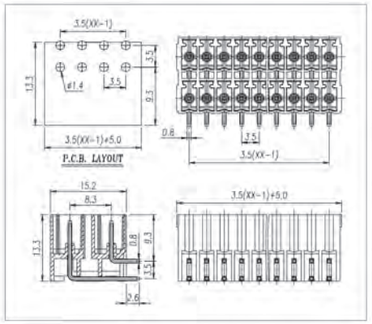

MODEL:JL15EDGVHBM-3.5

认证/CERTIFICATION

材质及电镀		
螺母	M2.5, 黄铜	
焊针	黄铜, 镀锡	
塑件	LCP, UL94V-0	
电气性能		
参考标准	UL	IEC
额定电压	300V	250V
额定电流	8A	10A
接触电阻	20mΩ	
绝缘电阻	500MΩ/DC500V	
耐电压	AC2000V/1Min	
机械性能		
温度范围	-40℃~+130℃	
瞬时温度	+285℃ 10秒	

MATERIAL		
Nut	M2.5, Brass	
Pin header	Brass, Sn plated	
Housing	PA66, UL94V-0	
ELECTRICAL		
Standard	UL	IEC
Rated voltage	300V	250V
Rated current	8A	10A
Contact resistance	20mΩ	
Insulation resistance	500MΩ/DC500V	
Withstanding voltage	AC2000V/1Min	
MECHANICAL		
Temp. range	-40℃~+130℃	
Max Soldering	+285℃ for 10 Sec	

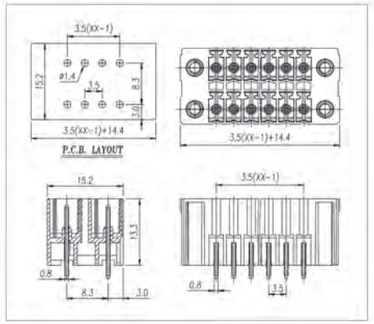

MODEL:JL15EDGRHBM-3.5

认证/CERTIFICATION

材质及电镀		
螺母	M2.5, 黄铜	
焊针	黄铜, 镀锡	
塑件	LCP, UL94V-0	
电气性能		
参考标准	UL	IEC
额定电压	300V	250V
额定电流	8A	10A
接触电阻	20mΩ	
绝缘电阻	500MΩ/DC500V	
耐电压	AC2000V/1Min	
机械性能		
温度范围	-40℃~+130℃	
瞬时温度	+285℃ 10秒	

MATERIAL		
Nut	M2.5, Brass	
Pin header	Brass, Sn plated	
Housing	PA66, UL94V-0	
ELECTRICAL		
Standard	UL	IEC
Rated voltage	300V	250V
Rated current	8A	10A
Contact resistance	20mΩ	
Insulation resistance	500MΩ/DC500V	
Withstanding voltage	AC2000V/1Min	
MECHANICAL		
Temp. range	-40℃~+130℃	
Max Soldering	+285℃ for 10 Sec	

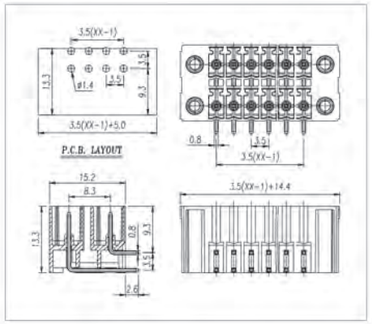

MODEL:JL15EDGVHBN-3.5

认证/CERTIFICATION

材质及电镀		
螺母	M2.5, 黄铜	
焊针	黄铜, 镀锡	
塑件	LCP, UL94V-0	
电气性能		
参考标准	UL	IEC
额定电压	300V	250V
额定电流	8A	10A
接触电阻	20mΩ	
绝缘电阻	500MΩ/DC500V	
耐电压	AC2000V/1Min	
机械性能		
温度范围	-40℃~+130℃	
瞬时温度	+285℃ 10秒	

MATERIAL		
Nut	M2.5, Brass	
Pin header	Brass, Sn plated	
Housing	PA66, UL94V-0	
ELECTRICAL		
Standard	UL	IEC
Rated voltage	300V	250V
Rated current	8A	10A
Contact resistance	20mΩ	
Insulation resistance	500MΩ/DC500V	
Withstanding voltage	AC2000V/1Min	
MECHANICAL		
Temp. range	-40℃~+130℃	
Max Soldering	+285℃ for 10 Sec	

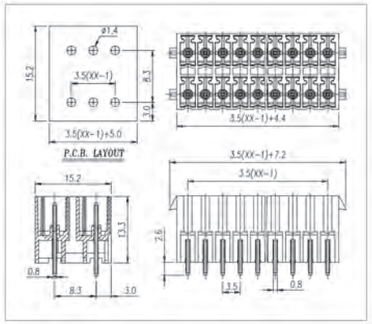

MODEL:JL15EDGRHBN-3.5

认证/CERTIFICATION

材质及电镀		
螺母	M2.5, 黄铜	
焊针	黄铜, 镀锡	
塑件	LCP, UL94V-0	
电气性能		
参考标准	UL	IEC
额定电压	300V	250V
额定电流	8A	10A
接触电阻	20mΩ	
绝缘电阻	500MΩ/DC500V	
耐电压	AC2000V/1Min	
机械性能		
温度范围	-40℃~+130℃	
瞬时温度	+285℃ 10秒	

MATERIAL		
Nut	M2.5, Brass	
Pin header	Brass, Sn plated	
Housing	PA66, UL94V-0	
ELECTRICAL		
Standard	UL	IEC
Rated voltage	300V	250V
Rated current	8A	10A
Contact resistance	20mΩ	
Insulation resistance	500MΩ/DC500V	
Withstanding voltage	AC2000V/1Min	
MECHANICAL		
Temp. range	-40℃~+130℃	
Max Soldering	+285℃ for 10 Sec	

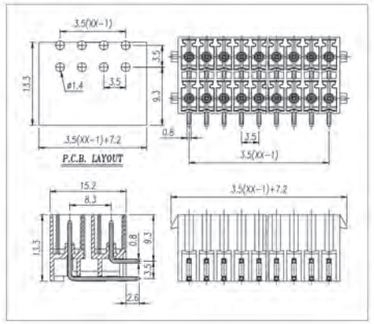

MODEL:JL15EDGK-3.5

认证/CERTIFICATION

材质及电镀		
螺丝	M2.0, 钢, 镀锌	
夹片	磷青铜, 镀镍	
方块	黄铜, 镀镍	
塑件	PA66, UL94V-0	
电气性能		
参考标准	UL	IEC
额定电压	300V	250V
额定电流	8A	7A
使用线径	28~16AWG	1.5mm²
接触电阻	20mΩ	
绝缘电阻	500MΩ/DC500V	
耐电压	AC2000V/1Min	
机械性能		
温度范围	-40℃~+105℃	
瞬时温度	+250℃ 5秒	
扭矩	2.04kgf-cm/0.2Nm/1.77Lbin	
剥线长度	6~7mm	

MATERIAL		
Screws	M2.0 Steel Zn plated	
Clamp	Phosphor bronze, Ni plated	
Cage	Brass, Ni plated	
Housing	PA66, UL94V-0	
ELECTRICAL		
Standard	UL	IEC
Rated voltage	300V	250V
Rated current	8A	7A
Wire range	28~16AWG	1.5mm²
Contact resistance	20mΩ	
Insulation resistance	500MΩ/DC500V	
Withstanding voltage	AC2000V/1Min	
MECHANICAL		
Temp. range	-40℃~+105℃	
Max. soldering	+250℃ for 5 Sec	
Torque	2.04kgf-cm/0.2Nm/1.77Lbin	
Strip length	6~7mm	

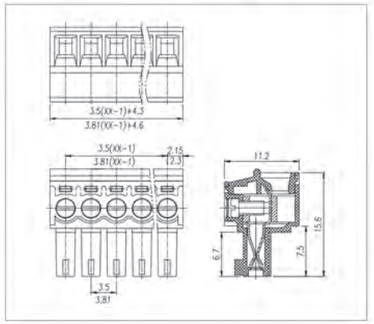

MODEL:JL15EDGKM

认证/CERTIFICATION		
材质及电镀		
螺丝	M2.0, 钢, 镀锌	
夹片	磷青铜, 镀镍	
方块	黄铜, 镀镍	
塑件	PA66, UL94V-0	
电气性能		
参考标准	UL	IEC
额定电压	300V	250V
额定电流	8A	7A
使用线径	28~16AWG	1.5mm²
接触电阻	20mΩ	
绝缘电阻	500MΩ/DC500V	
耐电压	AC2000V/1Min	
机械性能		
温度范围	-40℃~+105℃	
瞬时温度	+250℃ 5秒	
扭矩	2.04kgf-cm/0.2Nm/1.77Lbin	
剥线长度	6-7mm	

MATERIAL		
Screws	M2.0 Steel Zn plated	
Clamp	Phosphor bronze, Ni plated	
Cage	Brass, Ni plated	
Housing	PA66, UL94V-0	
ELECTRICAL		
Standard	UL	IEC
Rated voltage	300V	250V
Rated current	8A	7A
Wire range	28~16AWG	1.5mm²
Contact resistance	20mΩ	
Insulation resistance	500MΩ/DC500V	
Withstanding voltage	AC2000V/1Min	
MECHANICAL		
Temp. range	-40℃~+105℃	
Max. soldering	+250℃ for 5 Sec	
Torque	2.04kgf-cm/0.2Nm/1.77Lbin	
Strip length	6~7mm	

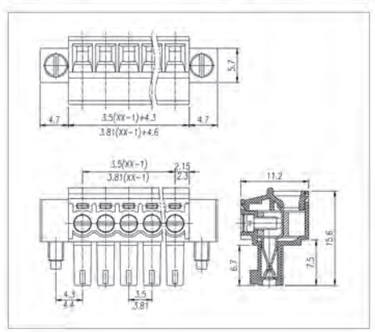

MODEL:JL15EDGKA

认证/CERTIFICATION		
材质及电镀		
螺丝	M2.0, 钢, 镀锌	
夹片	磷青铜, 镀镍	
方块	黄铜, 镀镍	
塑件	PA66, UL94V-0	
电气性能		
参考标准	UL	IEC
额定电压	300V	250V
额定电流	8A	7A
使用线径	28~16AWG	1.5mm²
接触电阻	20mΩ	
绝缘电阻	500MΩ/DC500V	
耐电压	AC2000V/1Min	
机械性能		
温度范围	-40℃~+105℃	
瞬时温度	+250℃ 5秒	
扭矩	2.04kgf-cm/0.2Nm/1.77Lbin	
剥线长度	6-7mm	

MATERIAL		
Screws	M2.0 Steel Zn plated	
Clamp	Phosphor bronze, Ni plated	
Cage	Brass, Ni plated	
Housing	PA66, UL94V-0	
ELECTRICAL		
Standard	UL	IEC
Rated voltage	300V	250V
Rated current	8A	7A
Wire range	28~16AWG	1.5mm²
Contact resistance	20mΩ	
Insulation resistance	500MΩ/DC500V	
Withstanding voltage	AC2000V/1Min	
MECHANICAL		
Temp. range	-40℃~+105℃	
Max. soldering	+250℃ for 5 Sec	
Torque	2.04kgf-cm/0.2Nm/1.77Lbin	
Strip length	6~7mm	

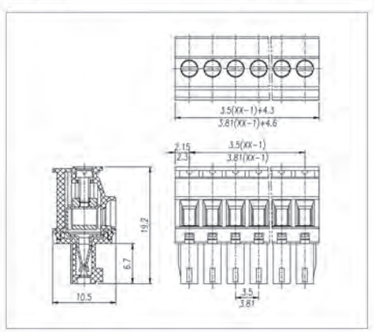

MODEL:JL15EDGKAM

认证/CERTIFICATION		
材质及电镀		
螺丝	M2.0, 钢, 镀锌	
夹片	磷青铜, 镀镍	
方块	黄铜, 镀镍	
塑件	PA66, UL94V-0	
电气性能		
参考标准	UL	IEC
额定电压	300V	250V
额定电流	8A	7A
使用线径	28~16AWG	1.5mm²
接触电阻	20mΩ	
绝缘电阻	500MΩ/DC500V	
耐电压	AC2000V/1Min	
机械性能		
温度范围	-40℃~+105℃	
瞬时温度	+250℃ 5秒	
扭矩	2.04kgf-cm/0.2Nm/1.77Lbin	
剥线长度	6-7mm	

MATERIAL		
Screws	M2.0 Steel Zn plated	
Clamp	Phosphor bronze, Ni plated	
Cage	Brass, Ni plated	
Housing	PA66, UL94V-0	
ELECTRICAL		
Standard	UL	IEC
Rated voltage	300V	250V
Rated current	8A	7A
Wire range	28~16AWG	1.5mm²
Contact resistance	20mΩ	
Insulation resistance	500MΩ/DC500V	
Withstanding voltage	AC2000V/1Min	
MECHANICAL		
Temp. range	-40℃~+105℃	
Max. soldering	+250℃ for 5 Sec	
Torque	2.04kgf-cm/0.2Nm/1.77Lbin	
Strip length	6~7mm	

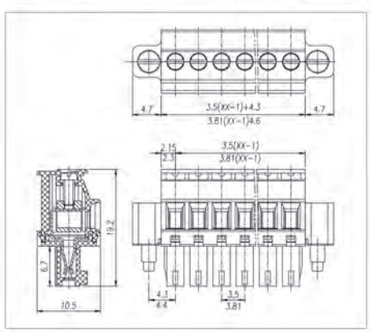

MODEL:JL15EDGKB

认证/CERTIFICATION		
材质及电镀		
螺丝	M2.0, 钢, 镀锌	
夹片	磷青铜, 镀镍	
方块	黄铜, 镀镍	
塑件	PA66, UL94V-0	
电气性能		
参考标准	UL	IEC
额定电压	300V	250V
额定电流	8A	7A
使用线径	28~16AWG	1.5mm²
接触电阻	20mΩ	
绝缘电阻	500MΩ/DC500V	
耐电压	AC2000V/1Min	
机械性能		
温度范围	-40℃~+105℃	
瞬时温度	+250℃ 5秒	
扭矩	2.04kgf-cm/0.2Nm/1.77Lbin	
剥线长度	6-7mm	

MATERIAL		
Screws	M2.0 Steel Zn plated	
Clamp	Phosphor bronze, Ni plated	
Cage	Brass, Ni plated	
Housing	PA66, UL94V-0	
ELECTRICAL		
Standard	UL	IEC
Rated voltage	300V	250V
Rated current	8A	7A
Wire range	28~16AWG	1.5mm²
Contact resistance	20mΩ	
Insulation resistance	500MΩ/DC500V	
Withstanding voltage	AC2000V/1Min	
MECHANICAL		
Temp. range	-40℃~+105℃	
Max. soldering	+250℃ for 5 Sec	
Torque	2.04kgf-cm/0.2Nm/1.77Lbin	
Strip length	6~7mm	

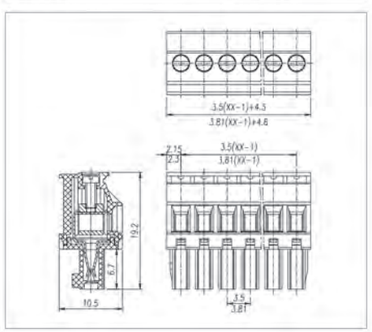

MODEL:JL15EDGKBM

认证/CERTIFICATION		
材质及电镀		
螺丝	M2.0, 钢, 镀锌	
夹片	磷青铜, 镀镍	
方块	黄铜, 镀镍	
塑件	PA66, UL94V-0	
电气性能		
参考标准	UL	IEC
额定电压	300V	250V
额定电流	8A	7A
使用线径	28~16AWG	1.5mm²
接触电阻	20mΩ	
绝缘电阻	500MΩ/DC500V	
耐电压	AC2000V/1Min	
机械性能		
温度范围	-40℃~+105℃	
瞬时温度	+250℃ 5秒	
扭矩	2.04kgf-cm/0.2Nm/1.77Lbin	
剥线长度	6-7mm	

MATERIAL		
Screws	M2.0 Steel Zn plated	
Clamp	Phosphor bronze, Ni plated	
Cage	Brass, Ni plated	
Housing	PA66, UL94V-0	
ELECTRICAL		
Standard	UL	IEC
Rated voltage	300V	250V
Rated current	8A	7A
Wire range	28~16AWG	1.5mm²
Contact resistance	20mΩ	
Insulation resistance	500MΩ/DC500V	
Withstanding voltage	AC2000V/1Min	
MECHANICAL		
Temp. range	-40℃~+105℃	
Max. soldering	+250℃ for 5 Sec	
Torque	2.04kgf-cm/0.2Nm/1.77Lbin	
Strip length	6~7mm	

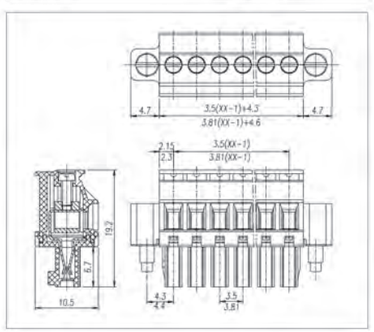

MODEL:JL15EDGKC

认证/CERTIFICATION		
材质及电镀		
螺丝	M2.0, 钢, 镀锌	
夹片	磷青铜, 镀镍	
方块	黄铜, 镀镍	
滑块	碳钢, 镀锌	
塑件	PA66, UL94V-0	
电气性能		
参考标准	UL	IEC
额定电压	300V	250V
额定电流	8A	7A
使用线径	28~16AWG	1.5mm²
接触电阻	20mΩ	
绝缘电阻	500MΩ/DC500V	
耐电压	AC2000V/1Min	
机械性能		
温度范围	-40℃~+105℃	
瞬时温度	+250℃ 5秒	
扭矩	2.04kgf-cm/0.2Nm/1.77Lbin	
剥线长度	6-7mm	

MATERIAL		
Screws	M2.0 Steel Zn plated	
Clamp	Phosphor bronze, Ni plated	
Cage	Brass, Ni plated	
Slide block	Steel Zn plated	
Housing	PA66, UL94V-0	
ELECTRICAL		
Standard	UL	IEC
Rated voltage	300V	250V
Rated current	8A	7A
Wire range	28~16AWG	1.5mm²
Contact resistance	20mΩ	
Insulation resistance	500MΩ/DC500V	
Withstanding voltage	AC2000V/1Min	
MECHANICAL		
Temp. range	-40℃~+105℃	
Max. soldering	+250℃ for 5 Sec	
Torque	2.04kgf-cm/0.2Nm/1.77Lbin	
Strip length	6~7mm	

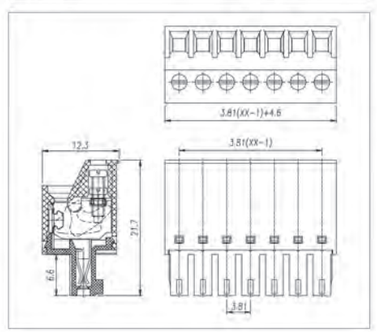

Pitch:3.81mm

MODEL:JL15EDGKCM

认证/CERTIFICATION

材质及电镀		
螺丝	M2.0, 钢, 镀锌	
夹片	磷青铜, 镀镍	
方块	黄铜, 镀镍	
滑块	碳钢, 镀锌	
塑件	PA66, UL94V-0	
电气性能		
参考标准	UL	IEC
额定电压	300V	250V
额定电流	8A	7A
使用线径	28~16AWG	1.5mm²
接触电阻	20mΩ	
绝缘电阻	500MΩ/DC500V	
耐电压	AC2000V/1Min	
机械性能		
温度范围	-40℃~+105℃	
瞬时温度	+250℃ 5秒	
扭矩	2.04kgf-cm/0.2Nm/1.77Lbin	
剥线长度	6-7mm	

MATERIAL		
Screws	M2.0 Steel Zn plated	
Clamp	Phosphor bronze, Ni plated	
Cage	Brass, Ni plated	
Slide block	Steel Zn plated	
Housing	PA66, UL94V-0	
ELECTRICAL		
Standard	UL	IEC
Rated voltage	300V	250V
Rated current	8A	7A
Wire range	28~16AWG	1.5mm²
Contact resistance	20mΩ	
Insulation resistance	500MΩ/DC500V	
Withstanding voltage	AC2000V/1Min	
MECHANICAL		
Temp. range	-40℃~+105℃	
Max. soldering	+250℃ for 5 Sec	
Torque	2.04kgf-cm/0.2Nm/1.77Lbin	
Strip length	6~7mm	

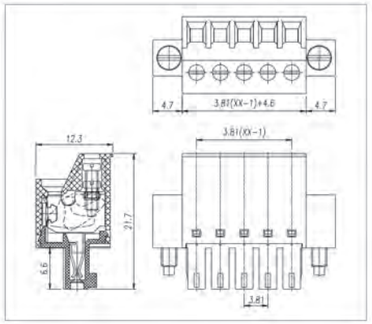

Pitch:3.5/3.81mm

MODEL:JL15EDGKD

认证/CERTIFICATION

材质及电镀		
夹子	磷青铜, 镀镍	
弹片	不锈钢	
塑件	PA66, UL94V-0	
电气性能		
参考标准	UL	IEC
额定电压	300V	250V
额定电流	8A	7A
使用线径	28~16AWG	1.5mm²
接触电阻	20mΩ	
绝缘电阻	500MΩ/DC500V	
耐电压	AC2000V/1Min	
机械性能		
温度范围	-40℃~+105℃	
剥线长度	6~7mm	

MATERIAL		
Clamp	Phosphor bronze, Ni plated	
Shrapnel	Stainless steel	
Housing	PA66, UL94V-0	
ELECTRICAL		
Standard	UL	IEC
Rated voltage	300V	250V
Rated current	8A	7A
Wire range	28~16AWG	1.5mm²
Contact resistance	20mΩ	
Insulation resistance	500MΩ/DC500V	
Withstanding voltage	AC2000V/1Min	
MECHANICAL		
Temp. range	-40℃~+105℃	
Strip length	6~7mm	

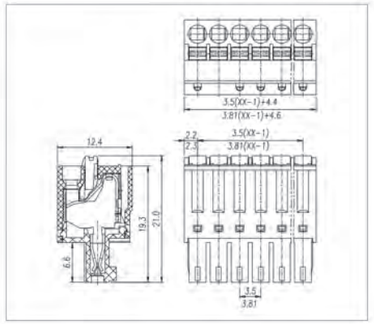

Pitch:3.5/3.81mm

MODEL:JL15EDGKDM

认证/CERTIFICATION

材质及电镀		
夹子	磷青铜, 镀镍	
弹片	不锈钢	
塑件	PA66, UL94V-0	
电气性能		
参考标准	UL	IEC
额定电压	300V	250V
额定电流	8A	7A
使用线径	28~16AWG	1.5mm²
接触电阻	20mΩ	
绝缘电阻	500MΩ/DC500V	
耐电压	AC2000V/1Min	
机械性能		
温度范围	-40℃~+105℃	
剥线长度	6~7mm	

MATERIAL		
Clamp	Phosphor bronze, Ni plated	
Shrapnel	Stainless steel	
Housing	PA66, UL94V-0	
ELECTRICAL		
Standard	UL	IEC
Rated voltage	300V	250V
Rated current	8A	7A
Wire range	28~16AWG	1.5mm²
Contact resistance	20mΩ	
Insulation resistance	500MΩ/DC500V	
Withstanding voltage	AC2000V/1Min	
MECHANICAL		
Temp. range	-40℃~+105℃	
Strip length	6~7mm	

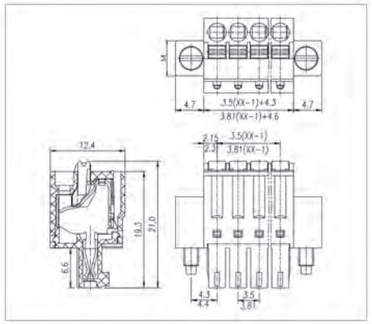

Pitch:3.81mm

MODEL:JL15EDGB

认证/CERTIFICATION

材质及电镀		
焊针	磷青铜, 镀锡	
塑件	PA66, UL94V-0	
电气性能		
参考标准	UL	IEC
额定电压	300V	250V
额定电流	8A	10A
接触电阻	20mΩ	
绝缘电阻	500MΩ/DC500V	
耐电压	AC2000V/1Min	
机械性能		
温度范围	-40℃~+105℃	
瞬时温度	+250℃ 5秒	

MATERIAL		
Pin header	Phosphor bronze, Sn plated	
Housing	PA66, UL94V-0	
ELECTRICAL		
Standard	UL	IEC
Rated voltage	300V	250V
Rated current	8A	10A
Contact resistance	20mΩ	
Insulation resistance	500MΩ/DC500V	
Withstanding voltage	AC2000V/1Min	
MECHANICAL		
Temp. range	-40℃~+105℃	
Max. soldering	+250℃ for 5 Sec	

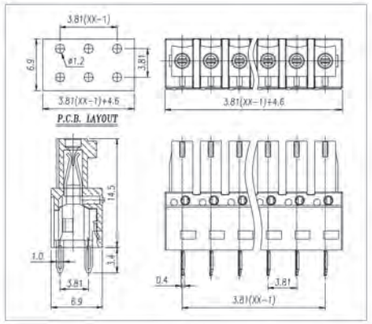

Pitch:3.81mm

MODEL:JL15EDGBM

认证/CERTIFICATION

材质及电镀		
螺母	M2.5,黄铜	
焊针	磷青铜, 镀锡	
塑件	PA66, UL94V-0	
电气性能		
参考标准	UL	IEC
额定电压	300V	250V
额定电流	8A	10A
接触电阻	20mΩ	
绝缘电阻	500MΩ/DC500V	
耐电压	AC2000V/1Min	
机械性能		
温度范围	-40℃~+105℃	
瞬时温度	+250℃ 5秒	

MATERIAL		
Nut	M2.5,Brass	
Pin header	Phosphor bronze, Sn plated	
Housing	PA66, UL94V-0	
ELECTRICAL		
Standard	UL	IEC
Rated voltage	300V	250V
Rated current	8A	10A
Contact resistance	20mΩ	
Insulation resistance	500MΩ/DC500V	
Withstanding voltage	AC2000V/1Min	
MECHANICAL		
Temp. range	-40℃~+105℃	
Max. soldering	+250℃ for 5 Sec	

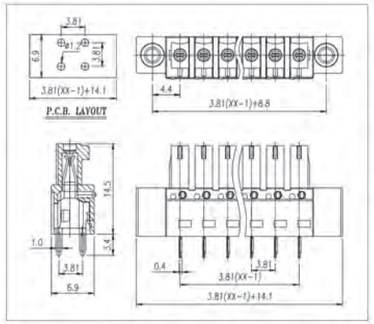

Pitch:3.81mm

MODEL:JL15EDGA

认证/CERTIFICATION

材质及电镀		
焊针	磷青铜, 镀锡	
塑件	PA66, UL94V-0	
电气性能		
参考标准	UL	IEC
额定电压	300V	250V
额定电流	8A	10A
接触电阻	20mΩ	
绝缘电阻	500MΩ/DC500V	
耐电压	AC2000V/1Min	
机械性能		
温度范围	-40℃~+105℃	
瞬时温度	+250℃ 5秒	

MATERIAL		
Pin header	Phosphor bronze, Sn plated	
Housing	PA66, UL94V-0	
ELECTRICAL		
Standard	UL	IEC
Rated voltage	300V	250V
Rated current	8A	10A
Contact resistance	20mΩ	
Insulation resistance	500MΩ/DC500V	
Withstanding voltage	AC2000V/1Min	
MECHANICAL		
Temp. range	-40℃~+105℃	
Max. soldering	+250℃ for 5 Sec	

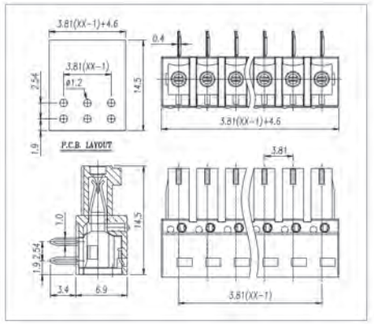

Pitch:3.81mm

MODEL:JL15EDGAM

认证/CERTIFICATION

材质及电镀		
螺母	M2.5,黄铜	
焊针	磷青铜, 镀锡	
塑件	PA66, UL94V-0	
电气性能		
参考标准	UL	IEC
额定电压	300V	250V
额定电流	8A	10A
接触电阻	20mΩ	
绝缘电阻	500MΩ/DC500V	
耐电压	AC2000V/1Min	
机械性能		
温度范围	-40℃~+105℃	
瞬时温度	+250℃ 5秒	

MATERIAL		
Nut	M2.5,Brass	
Pin header	Phosphor bronze, Sn plated	
Housing	PA66, UL94V-0	
ELECTRICAL		
Standard	UL	IEC
Rated voltage	300V	250V
Rated current	8A	10A
Contact resistance	20mΩ	
Insulation resistance	500MΩ/DC500V	
Withstanding voltage	AC2000V/1Min	
MECHANICAL		
Temp. range	-40℃~+105℃	
Max. soldering	+250℃ for 5 Sec	

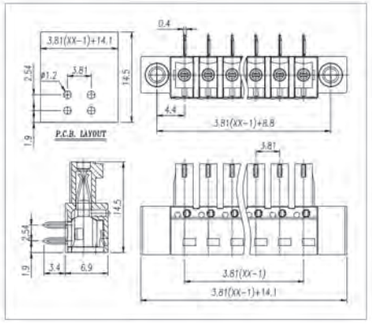

Pitch:3.81mm

MODEL:JL15EDGKR

认证/CERTIFICATION

材质及电镀		
螺丝	M2.0, 钢, 镀锌	
方针	黄铜, 镀锡	
方块	黄铜, 镀镍	
塑件	PA66, UL94V-0	
电气性能		
参考标准	UL	IEC
额定电压	300V	250V
额定电流	8A	10A
使用线径	28~16AWG	1.5mm²
接触电阻	20mΩ	
绝缘电阻	500MΩ/DC500V	
耐电压	AC2000V/1Min	
机械性能		
温度范围	-40℃~+105℃	
瞬时温度	+250℃ 5秒	
扭矩	2.04kgf-cm/0.2Nm/1.77Lbin	
剥线长度	7-8mm	

MATERIAL		
Screws	M2.0 Steel Zn plated	
Pin header	Brass, Sn plated	
Cage	Brass, Ni plated	
Housing	PA66, UL94V-0	
ELECTRICAL		
Standard	UL	IEC
Rated voltage	300V	250V
Rated current	8A	10A
Wire range	28~16AWG	1.5mm²
Contact resistance	20mΩ	
Insulation resistance	500MΩ/DC500V	
Withstanding voltage	AC2000V/1Min	
MECHANICAL		
Temp. range	-40℃~+105℃	
Max. soldering	+250℃ for 5 Sec	
Torque	2.04kgf-cm/0.2Nm/1.77Lbin	
Strip length	7~8mm	

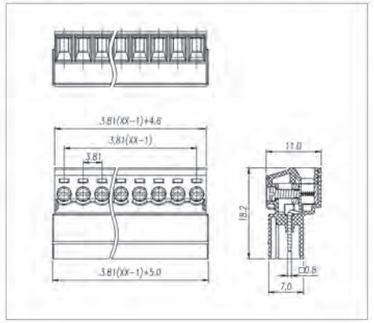

Pitch:3.81mm

MODEL:JL15EDGKRM

认证/CERTIFICATION

材质及电镀		
螺丝	M2.0, 钢, 镀锌	
方针	黄铜, 镀锡	
方块	黄铜, 镀镍	
塑件	PA66, UL94V-0	
电气性能		
参考标准	UL	IEC
额定电压	300V	250V
额定电流	8A	10A
使用线径	28~16AWG	1.5mm²
接触电阻	20mΩ	
绝缘电阻	500MΩ/DC500V	
耐电压	AC2000V/1Min	
机械性能		
温度范围	-40℃~+105℃	
瞬时温度	+250℃ 5秒	
扭矩	2.04kgf-cm/0.2Nm/1.77Lbin	
剥线长度	7-8mm	

MATERIAL		
Screws	M2.0 Steel Zn plated	
Pin header	Brass, Sn plated	
Cage	Brass, Ni plated	
Housing	PA66, UL94V-0	
ELECTRICAL		
Standard	UL	IEC
Rated voltage	300V	250V
Rated current	8A	10A
Wire range	28~16AWG	1.5mm²
Contact resistance	20mΩ	
Insulation resistance	500MΩ/DC500V	
Withstanding voltage	AC2000V/1Min	
MECHANICAL		
Temp. range	-40℃~+105℃	
Max. soldering	+250℃ for 5 Sec	
Torque	2.04kgf-cm/0.2Nm/1.77Lbin	
Strip length	7~8mm	

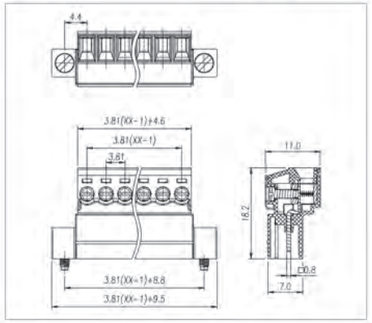

Pitch:3.81mm

MODEL:JL15EDGKRN

认证/CERTIFICATION

材质及电镀		
螺母	M2.5,黄铜	
螺丝	M2.0, 钢, 镀锌	
方针	黄铜, 镀锡	
方块	黄铜, 镀镍	
塑件	PA66, UL94V-0	
电气性能		
参考标准	UL	IEC
额定电压	300V	250V
额定电流	8A	10A
使用线径	28~16AWG	1.5mm²
接触电阻	20mΩ	
绝缘电阻	500MΩ/DC500V	
耐电压	AC2000V/1Min	
机械性能		
温度范围	-40℃~+105℃	
瞬时温度	+250℃ 5秒	
扭矩	2.04kgf-cm/0.2Nm/1.77Lbin	
剥线长度	7-8mm	

MATERIAL		
Nut	M2.5,Brass	
Screws	M2.0 Steel Zn plated	
Pin header	Brass, Sn plated	
Cage	Brass, Ni plated	
Housing	PA66, UL94V-0	
ELECTRICAL		
Standard	UL	IEC
Rated voltage	300V	250V
Rated current	8A	10A
Wire range	28~16AWG	1.5mm²
Contact resistance	20mΩ	
Insulation resistance	500MΩ/DC500V	
Withstanding voltage	AC2000V/1Min	
MECHANICAL		
Temp. range	-40℃~+105℃	
Max. soldering	+250℃ for 5 Sec	
Torque	2.04kgf-cm/0.2Nm/1.77Lbin	
Strip length	7~8mm	

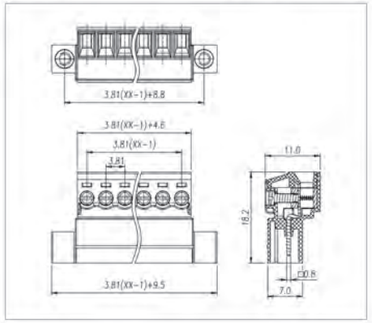

Pitch:3.5/3.81mm

MODEL:JL15EDGVC

认证/CERTIFICATION

材质及电镀		
焊针	黄铜, 镀锡	
塑件	PA66, UL94V-0	
电气性能		
参考标准	UL	IEC
额定电压	300V	250V
额定电流	8A	7A
接触电阻	20mΩ	
绝缘电阻	500MΩ/DC500V	
耐电压	AC2000V/1Min	
机械性能		
温度范围	-40℃~+105℃	
瞬时温度	+250℃ 5秒	

MATERIAL		
Pin header	Brass, Sn plated	
Housing	PA66, UL94V-0	
ELECTRICAL		
Standard	UL	IEC
Rated voltage	300V	250V
Rated current	8A	7A
Contact resistance	20mΩ	
Insulation resistance	500MΩ/DC500V	
Withstanding voltage	AC2000V/1Min	
MECHANICAL		
Temp. range	-40℃~+105℃	
Max. soldering	+250℃ for 5 Sec	

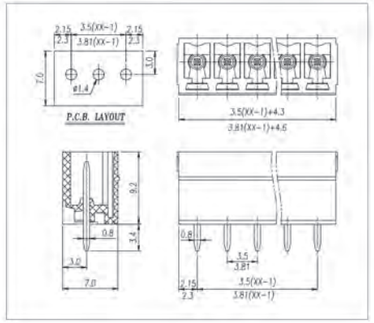

Pitch:3.5/3.81mm

MODEL:JL15EDGRC

认证/CERTIFICATION

材质及电镀		
焊针	黄铜, 镀锡	
塑件	PA66, UL94V-0	
电气性能		
参考标准	UL	IEC
额定电压	300V	250V
额定电流	8A	7A
接触电阻	20mΩ	
绝缘电阻	500MΩ/DC500V	
耐电压	AC2000V/1Min	
机械性能		
温度范围	-40℃~+105℃	
瞬时温度	+250℃ 5秒	

MATERIAL		
Pin header	Brass, Sn plated	
Housing	PA66, UL94V-0	
ELECTRICAL		
Standard	UL	IEC
Rated voltage	300V	250V
Rated current	8A	7A
Contact resistance	20mΩ	
Insulation resistance	500MΩ/DC500V	
Withstanding voltage	AC2000V/1Min	
MECHANICAL		
Temp. range	-40℃~+105℃	
Max. soldering	+250℃ for 5 Sec	

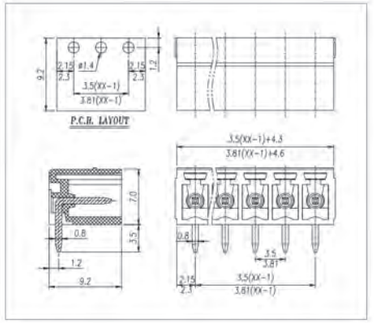

MODEL:JL15EDGVM

认证/CERTIFICATION	
材质及电镀	
螺母	M2.5,黄铜
焊针	黄铜, 镀锡
塑件	PA66, UL94V-0
电气性能	
参考标准	UL / IEC
额定电压	300V / 250V
额定电流	8A / 7A
接触电阻	20mΩ
绝缘电阻	500MΩ/DC500V
耐电压	AC2000V/1Min
机械性能	
温度范围	-40℃~+105℃
瞬时温度	+250℃ 5秒

MATERIAL	
Nut	M2.5,Brass
Pin header	Brass, Sn plated
Housing	PA66, UL94V-0
ELECTRICAL	
Standard	UL / IEC
Rated voltage	300V / 250V
Rated current	8A / 7A
Contact resistance	20mΩ
Insulation resistance	500MΩ/DC500V
Withstanding voltage	AC2000V/1Min
MECHANICAL	
Temp. range	-40℃~+105℃
Max. soldering	+250℃ for 5 Sec

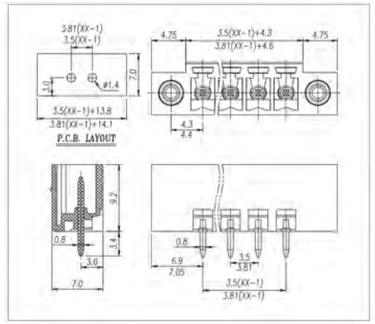

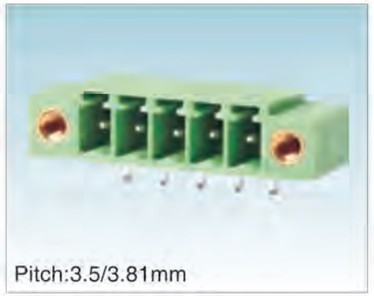

MODEL:JL15EDGRM

认证/CERTIFICATION	
材质及电镀	
螺母	M2.5,黄铜
焊针	黄铜, 镀锡
塑件	PA66, UL94V-0
电气性能	
参考标准	UL / IEC
额定电压	300V / 250V
额定电流	8A / 7A
接触电阻	20mΩ
绝缘电阻	500MΩ/DC500V
耐电压	AC2000V/1Min
机械性能	
温度范围	-40℃~+105℃
瞬时温度	+250℃ 5秒

MATERIAL	
Nut	M2.5,Brass
Pin header	Brass, Sn plated
Housing	PA66, UL94V-0
ELECTRICAL	
Standard	UL / IEC
Rated voltage	300V / 250V
Rated current	8A / 7A
Contact resistance	20mΩ
Insulation resistance	500MΩ/DC500V
Withstanding voltage	AC2000V/1Min
MECHANICAL	
Temp. range	-40℃~+105℃
Max. soldering	+250℃ for 5 Sec

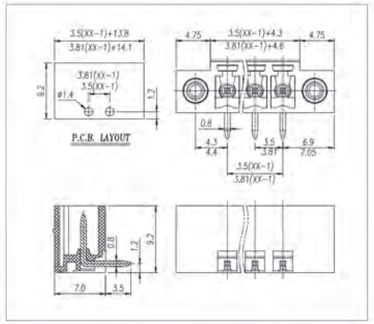

MODEL:JL15CDGV

认证/CERTIFICATION	
材质及电镀	
螺母	M2.5,黄铜
焊针	黄铜, 镀锡
塑件	PA66, UL94V-0
电气性能	
参考标准	UL / IEC
额定电压	300V / 250V
额定电流	8A / 7A
接触电阻	20mΩ
绝缘电阻	500MΩ/DC500V
耐电压	AC2000V/1Min
机械性能	
温度范围	-40℃~+105℃
瞬时温度	+250℃ 5秒

MATERIAL	
Nut	M2.5,Brass
Pin header	Brass, Sn plated
Housing	PA66, UL94V-0
ELECTRICAL	
Standard	UL / IEC
Rated voltage	300V / 250V
Rated current	8A / 7A
Contact resistance	20mΩ
Insulation resistance	500MΩ/DC500V
Withstanding voltage	AC2000V/1Min
MECHANICAL	
Temp. range	-40℃~+105℃
Max. soldering	+250℃ for 5 Sec

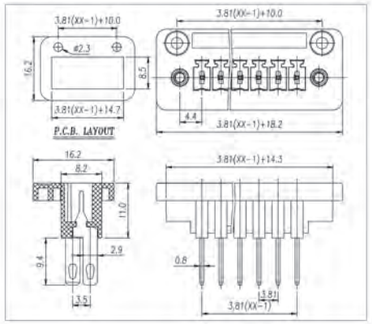

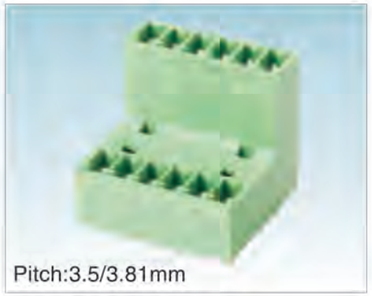

MODEL:JL15EDGVT

认证/CERTIFICATION	
材质及电镀	
焊针	黄铜, 镀锡
塑件	PA66, UL94V-0
电气性能	
参考标准	UL / IEC
额定电压	300V / 250V
额定电流	8A / 7A
接触电阻	20mΩ
绝缘电阻	500MΩ/DC500V
耐电压	AC2000V/1Min
机械性能	
温度范围	-40℃~+105℃
瞬时温度	+250℃ 5秒

MATERIAL	
Pin header	Brass, Sn plated
Housing	PA66, UL94V-0
ELECTRICAL	
Standard	UL / IEC
Rated voltage	300V / 250V
Rated current	8A / 7A
Contact resistance	20mΩ
Insulation resistance	500MΩ/DC500V
Withstanding voltage	AC2000V/1Min
MECHANICAL	
Temp. range	-40℃~+105℃
Max. soldering	+250℃ for 5 Sec

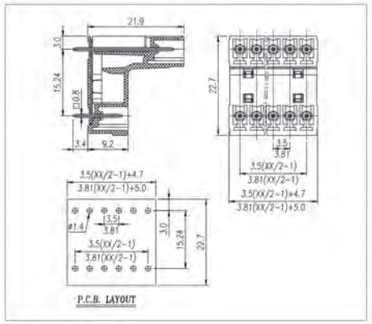

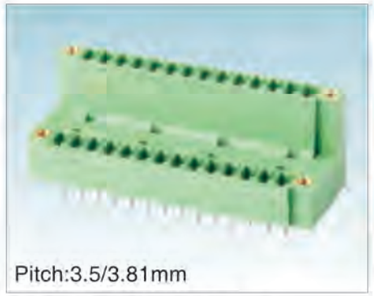

MODEL:JL15EDGVTM

认证/CERTIFICATION	
材质及电镀	
螺母	M2.5,黄铜
焊针	黄铜, 镀锡
塑件	PA66, UL94V-0
电气性能	
参考标准	UL / IEC
额定电压	300V / 250V
额定电流	8A / 7A
接触电阻	20mΩ
绝缘电阻	500MΩ/DC500V
耐电压	AC2000V/1Min
机械性能	
温度范围	-40℃~+105℃
瞬时温度	+250℃ 5秒

MATERIAL	
Nut	M2.5,Brass
Pin header	Brass, Sn plated
Housing	PA66, UL94V-0
ELECTRICAL	
Standard	UL / IEC
Rated voltage	300V / 250V
Rated current	8A / 7A
Contact resistance	20mΩ
Insulation resistance	500MΩ/DC500V
Withstanding voltage	AC2000V/1Min
MECHANICAL	
Temp. range	-40℃~+105℃
Max. soldering	+250℃ for 5 Sec

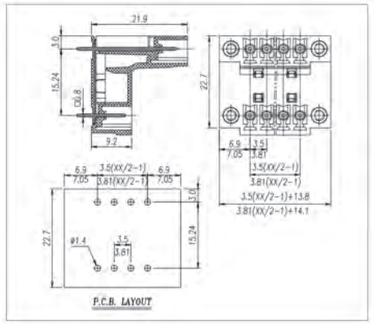

MODEL:JL15EDGRT

认证/CERTIFICATION	
材质及电镀	
焊针	黄铜, 镀锡
塑件	PA66, UL94V-0
电气性能	
参考标准	UL / IEC
额定电压	300V / 250V
额定电流	8A / 7A
接触电阻	20mΩ
绝缘电阻	500MΩ/DC500V
耐电压	AC2000V/1Min
机械性能	
温度范围	-40℃~+105℃
瞬时温度	+250℃ 5秒

MATERIAL	
Pin header	Brass, Sn plated
Housing	PA66, UL94V-0
ELECTRICAL	
Standard	UL / IEC
Rated voltage	300V / 250V
Rated current	8A / 7A
Contact resistance	20mΩ
Insulation resistance	500MΩ/DC500V
Withstanding voltage	AC2000V/1Min
MECHANICAL	
Temp. range	-40℃~+105℃
Max. soldering	+250℃ for 5 Sec

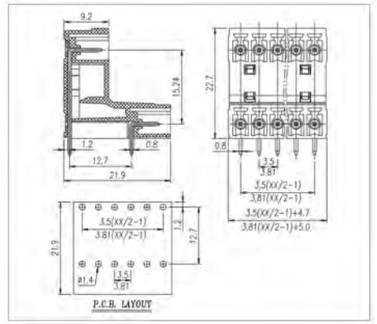

Pitch:3.5/3.81mm

MODEL:JL15EDGRTM

认证/CERTIFICATION	
材质及电镀	
螺母	M2.5,黄铜
焊针	黄铜, 镀锡
塑件	PA66, UL94V-0
电气性能	
参考标准	UL / IEC
额定电压	300V / 250V
额定电流	8A / 7A
接触电阻	20mΩ
绝缘电阻	500MΩ/DC500V
耐电压	AC2000V/1Min
机械性能	
温度范围	-40℃~+105℃
瞬时温度	+250℃ 5秒

MATERIAL	
Nut	M2.5,Brass
Pin header	Brass, Sn plated
Housing	PA66, UL94V-0
ELECTRICAL	
Standard	UL / IEC
Rated voltage	300V / 250V
Rated current	8A / 7A
Contact resistance	20mΩ
Insulation resistance	500MΩ/DC500V
Withstanding voltage	AC2000V/1Min
MECHANICAL	
Temp. range	-40℃~+105℃
Max. soldering	+250℃ for 5 Sec

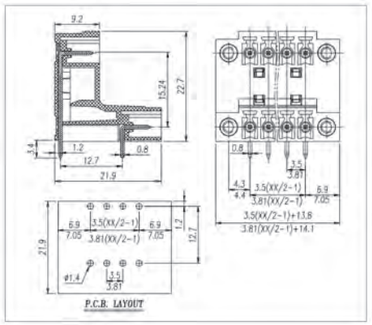

Pitch:3.5/3.81mm

MODEL:JL15EDGVH

认证/CERTIFICATION	
材质及电镀	
焊针	黄铜, 镀锡
塑件	PA66, UL94V-0
电气性能	
参考标准	UL / IEC
额定电压	300V / 250V
额定电流	8A / 7A
接触电阻	20mΩ
绝缘电阻	500MΩ/DC500V
耐电压	AC2000V/1Min
机械性能	
温度范围	-40℃~+105℃
瞬时温度	+250℃ 5秒

MATERIAL	
Pin header	Brass, Sn plated
Housing	PA66, UL94V-0
ELECTRICAL	
Standard	UL / IEC
Rated voltage	300V / 250V
Rated current	8A / 7A
Contact resistance	20mΩ
Insulation resistance	500MΩ/DC500V
Withstanding voltage	AC2000V/1Min
MECHANICAL	
Temp. range	-40℃~+105℃
Max. soldering	+250℃ for 5 Sec

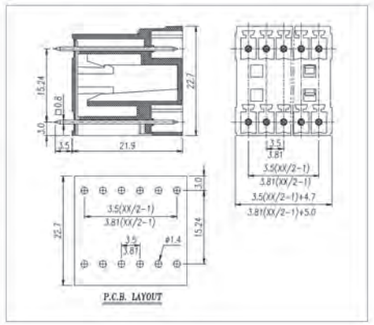

Pitch:3.5/3.81mm

MODEL:JL15EDGVHM

认证/CERTIFICATION	
材质及电镀	
螺母	M2.5,黄铜
焊针	黄铜, 镀锡
塑件	PA66, UL94V-0
电气性能	
参考标准	UL / IEC
额定电压	300V / 250V
额定电流	8A / 7A
接触电阻	20mΩ
绝缘电阻	500MΩ/DC500V
耐电压	AC2000V/1Min
机械性能	
温度范围	-40℃~+105℃
瞬时温度	+250℃ 5秒

MATERIAL	
Nut	M2.5,Brass
Pin header	Brass, Sn plated
Housing	PA66, UL94V-0
ELECTRICAL	
Standard	UL / IEC
Rated voltage	300V / 250V
Rated current	8A / 7A
Contact resistance	20mΩ
Insulation resistance	500MΩ/DC500V
Withstanding voltage	AC2000V/1Min
MECHANICAL	
Temp. range	-40℃~+105℃
Max. soldering	+250℃ for 5 Sec

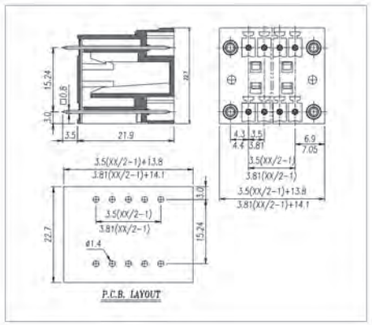

Pitch:3.5/3.81mm

MODEL:JL15EDGRH

认证/CERTIFICATION	
材质及电镀	
焊针	黄铜, 镀锡
塑件	PA66, UL94V-0
电气性能	
参考标准	UL / IEC
额定电压	300V / 250V
额定电流	8A / 7A
接触电阻	20mΩ
绝缘电阻	500MΩ/DC500V
耐电压	AC2000V/1Min
机械性能	
温度范围	-40℃~+105℃
瞬时温度	+250℃ 5秒

MATERIAL	
Pin header	Brass, Sn plated
Housing	PA66, UL94V-0
ELECTRICAL	
Standard	UL / IEC
Rated voltage	300V / 250V
Rated current	8A / 7A
Contact resistance	20mΩ
Insulation resistance	500MΩ/DC500V
Withstanding voltage	AC2000V/1Min
MECHANICAL	
Temp. range	-40℃~+105℃
Max. soldering	+250℃ for 5 Sec

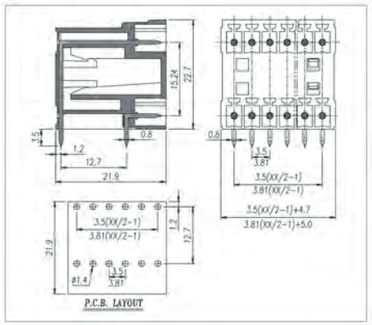

Pitch:3.5/3.81mm

MODEL:JL15EDGRHM

认证/CERTIFICATION	
材质及电镀	
螺母	M2.5,黄铜
焊针	黄铜, 镀锡
塑件	PA66, UL94V-0
电气性能	
参考标准	UL / IEC
额定电压	300V / 250V
额定电流	8A / 7A
接触电阻	20mΩ
绝缘电阻	500MΩ/DC500V
耐电压	AC2000V/1Min
机械性能	
温度范围	-40℃~+105℃
瞬时温度	+250℃ 5秒

MATERIAL	
Nut	M2.5,Brass
Pin header	Brass, Sn plated
Housing	PA66, UL94V-0
ELECTRICAL	
Standard	UL / IEC
Rated voltage	300V / 250V
Rated current	8A / 7A
Contact resistance	20mΩ
Insulation resistance	500MΩ/DC500V
Withstanding voltage	AC2000V/1Min
MECHANICAL	
Temp. range	-40℃~+105℃
Max. soldering	+250℃ for 5 Sec

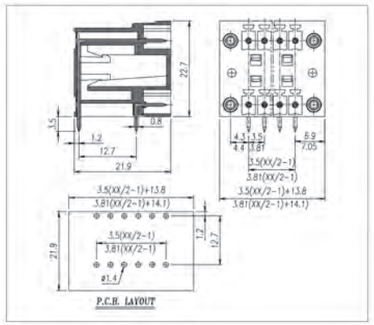

Pitch:5.0/5.08mm

MODEL:JL2EDGK

认证/CERTIFICATION	
材质及电镀	
螺丝	M3.0, 钢, 镀锌
夹片	磷青铜, 镀镍
方块	黄铜, 镀镍
塑件	PA66, UL94V-0
电气性能	
参考标准	UL / IEC
额定电压	300V / 450V
额定电流	15A / 20A
使用线径	28~14AWG / 2.5mm²
接触电阻	20mΩ
绝缘电阻	500MΩ/DC500V
耐电压	AC2000V/1Min
机械性能	
温度范围	-40℃~+105℃
瞬时温度	+250℃ 5秒
扭矩	5.10kgf-cm/0.5Nm/4.43Lbin
剥线长度	7~8mm

MATERIAL	
Screws	M3.0 Steel Zn plated
Clamp	Phosphor bronze, Ni plated
Cage	Brass, Ni plated
Housing	PA66, UL94V-0
ELECTRICAL	
Standard	UL / IEC
Rated voltage	300V / 450V
Rated current	15A / 20A
Wire range	28~14AWG / 2.5mm²
Contact resistance	20mΩ
Insulation resistance	500MΩ/DC500V
Withstanding voltage	AC2000V/1Min
MECHANICAL	
Temp. range	-40℃~+105℃
Max. soldering	+250℃ for 5 Sec
Torque	5.10kgf-cm/0.5Nm/4.43Lbin
Strip length	7~8mm

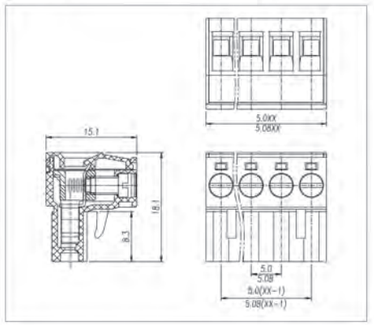

Pitch:7.5/7.62mm

MODEL:JL2EDGK-7.50/7.62

认证/CERTIFICATION		
材质及电镀		
螺丝	M3.0, 钢, 镀锌	
夹片	磷青铜, 镀镍	
方块	黄铜, 镀镍	
塑件	PA66, UL94V-0	
电气性能		
参考标准	UL	IEC
额定电压	300V	450V
额定电流	15A	20A
使用线径	28~14AWG	2.5mm²
接触电阻	20mΩ	
绝缘电阻	500MΩ/DC500V	
耐电压	AC2000V/1Min	
机械性能		
温度范围	-40℃~+105℃	
瞬时温度	+250℃ 5秒	
扭矩	5.10kgf-cm/0.5Nm/4.43Lbin	
剥线长度	7-8mm	

MATERIAL		
Screws	M3.0 Steel Zn plated	
Clamp	Phosphor bronze, Ni plated	
Cage	Brass, Ni plated	
Housing	PA66, UL94V-0	
ELECTRICAL		
Standard	UL	IEC
Rated voltage	300V	450V
Rated current	15A	20A
Wire range	28~14AWG	2.5mm²
Contact resistance	20mΩ	
Insulation resistance	500MΩ/DC500V	
Withstanding voltage	AC2000V/1Min	
MECHANICAL		
Temp. range	-40℃~+105℃	
Max. soldering	+250℃ for 5 Sec	
Torque	5.10kgf-cm/0.5Nm/4.43Lbin	
Strip length	7~8mm	

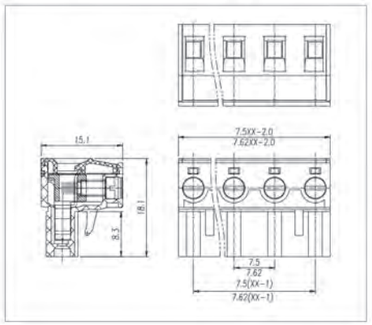

Pitch:10.0/10.16mm

MODEL:JL2EDGK-10.0/10.16

认证/CERTIFICATION		
材质及电镀		
螺丝	M3.0, 钢, 镀锌	
夹片	磷青铜, 镀镍	
方块	黄铜, 镀镍	
塑件	PA66, UL94V-0	
电气性能		
参考标准	UL	IEC
额定电压	600V	750V
额定电流	15A	20A
使用线径	28~14AWG	2.5mm²
接触电阻	20mΩ	
绝缘电阻	500MΩ/DC500V	
耐电压	AC2000V/1Min	
机械性能		
温度范围	-40℃~+105℃	
瞬时温度	+250℃ 5秒	
扭矩	5.10kgf-cm/0.5Nm/4.43Lbin	
剥线长度	7-8mm	

MATERIAL		
Screws	M3.0 Steel Zn plated	
Clamp	Phosphor bronze, Ni plated	
Cage	Brass, Ni plated	
Housing	PA66, UL94V-0	
ELECTRICAL		
Standard	UL	IEC
Rated voltage	600V	750V
Rated current	15A	20A
Wire range	28~14AWG	2.5mm²
Contact resistance	20mΩ	
Insulation resistance	500MΩ/DC500V	
Withstanding voltage	AC2000V/1Min	
MECHANICAL		
Temp. range	-40℃~+105℃	
Max. soldering	+250℃ for 5 Sec	
Torque	5.10kgf-cm/0.5Nm/4.43Lbin	
Strip length	7~8mm	

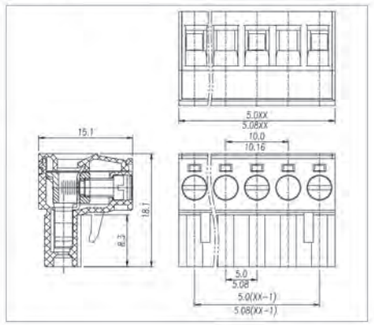

Pitch:5.0/5.08mm

MODEL:JL2EDGKM

认证/CERTIFICATION		
材质及电镀		
螺丝	M3.0, 钢, 镀锌	
夹片	磷青铜, 镀镍	
方块	黄铜, 镀镍	
塑件	PA66, UL94V-0	
电气性能		
参考标准	UL	IEC
额定电压	300V	450V
额定电流	15A	20A
使用线径	28~14AWG	2.5mm²
接触电阻	20mΩ	
绝缘电阻	500MΩ/DC500V	
耐电压	AC2000V/1Min	
机械性能		
温度范围	-40℃~+105℃	
瞬时温度	+250℃ 5秒	
扭矩	5.10kgf-cm/0.5Nm/4.43Lbin	
剥线长度	7-8mm	

MATERIAL		
Screws	M3.0 Steel Zn plated	
Clamp	Phosphor bronze, Ni plated	
Cage	Brass, Ni plated	
Housing	PA66, UL94V-0	
ELECTRICAL		
Standard	UL	IEC
Rated voltage	300V	450V
Rated current	15A	20A
Wire range	28~14AWG	2.5mm²
Contact resistance	20mΩ	
Insulation resistance	500MΩ/DC500V	
Withstanding voltage	AC2000V/1Min	
MECHANICAL		
Temp. range	-40℃~+105℃	
Max. soldering	+250℃ for 5 Sec	
Torque	5.10kgf-cm/0.5Nm/4.43Lbin	
Strip length	7~8mm	

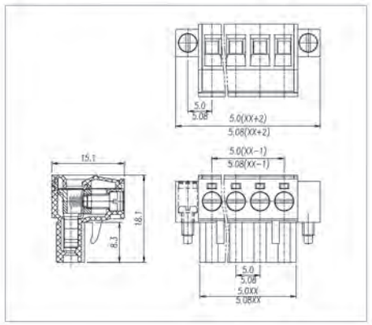

Pitch:7.5/7.62mm

MODEL:JL2EDGKM-7.5/7.62

认证/CERTIFICATION		
材质及电镀		
螺丝	M3.0, 钢, 镀锌	
夹片	磷青铜, 镀镍	
方块	黄铜, 镀镍	
塑件	PA66, UL94V-0	
电气性能		
参考标准	UL	IEC
额定电压	300V	450V
额定电流	15A	20A
使用线径	28~14AWG	2.5mm²
接触电阻	20mΩ	
绝缘电阻	500MΩ/DC500V	
耐电压	AC2000V/1Min	
机械性能		
温度范围	-40℃~+105℃	
瞬时温度	+250℃ 5秒	
扭矩	5.10kgf-cm/0.5Nm/4.43Lbin	
剥线长度	7-8mm	

MATERIAL		
Screws	M3.0 Steel Zn plated	
Clamp	Phosphor bronze, Ni plated	
Cage	Brass, Ni plated	
Housing	PA66, UL94V-0	
ELECTRICAL		
Standard	UL	IEC
Rated voltage	300V	450V
Rated current	15A	20A
Wire range	28~14AWG	2.5mm²
Contact resistance	20mΩ	
Insulation resistance	500MΩ/DC500V	
Withstanding voltage	AC2000V/1Min	
MECHANICAL		
Temp. range	-40℃~+105℃	
Max. soldering	+250℃ for 5 Sec	
Torque	5.10kgf-cm/0.5Nm/4.43Lbin	
Strip length	7~8mm	

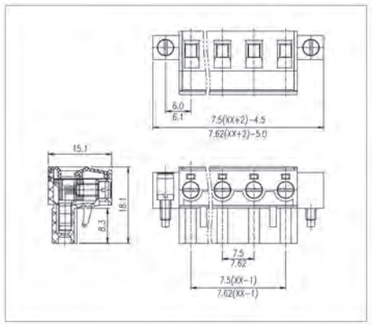

Pitch:10.0/10.16mm

MODEL:JL2EDGKM-10.0/10.16

认证/CERTIFICATION		
材质及电镀		
螺丝	M3.0, 钢, 镀锌	
夹片	磷青铜, 镀镍	
方块	黄铜, 镀镍	
塑件	PA66, UL94V-0	
电气性能		
参考标准	UL	IEC
额定电压	600V	750V
额定电流	15A	20A
使用线径	28~14AWG	2.5mm²
接触电阻	20mΩ	
绝缘电阻	500MΩ/DC500V	
耐电压	AC2000V/1Min	
机械性能		
温度范围	-40℃~+105℃	
瞬时温度	+250℃ 5秒	
扭矩	5.10kgf-cm/0.5Nm/4.43Lbin	
剥线长度	7-8mm	

MATERIAL		
Screws	M3.0 Steel Zn plated	
Clamp	Phosphor bronze, Ni plated	
Cage	Brass, Ni plated	
Housing	PA66, UL94V-0	
ELECTRICAL		
Standard	UL	IEC
Rated voltage	600V	750V
Rated current	15A	20A
Wire range	28~14AWG	2.5mm²
Contact resistance	20mΩ	
Insulation resistance	500MΩ/DC500V	
Withstanding voltage	AC2000V/1Min	
MECHANICAL		
Temp. range	-40℃~+105℃	
Max. soldering	+250℃ for 5 Sec	
Torque	5.10kgf-cm/0.5Nm/4.43Lbin	
Strip length	7~8mm	

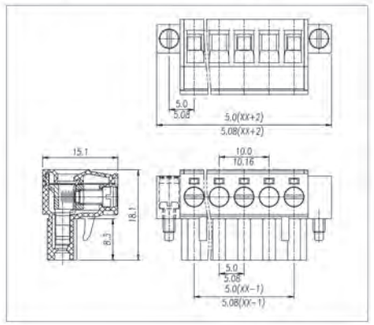

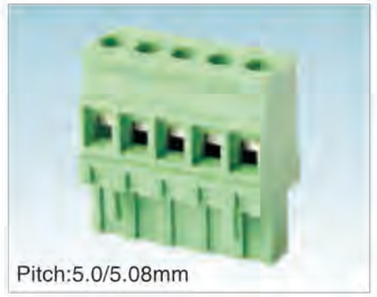
Pitch:5.0/5.08mm

MODEL:JL2EDGKA

认证/CERTIFICATION		
材质及电镀		
螺丝	M3.0, 钢, 镀锌	
夹片	磷青铜, 镀镍	
方块	黄铜, 镀镍	
塑件	PA66, UL94V-0	
电气性能		
参考标准	UL	IEC
额定电压	300V	450V
额定电流	15A	20A
使用线径	28~14AWG	2.5mm²
接触电阻	20mΩ	
绝缘电阻	500MΩ/DC500V	
耐电压	AC2000V/1Min	
机械性能		
温度范围	-40℃~+105℃	
瞬时温度	+250℃ 5秒	
扭矩	5.10kgf-cm/0.5Nm/4.43Lbin	
剥线长度	7-8mm	

MATERIAL		
Screws	M3.0 Steel Zn plated	
Clamp	Phosphor bronze, Ni plated	
Cage	Brass, Ni plated	
Housing	PA66, UL94V-0	
ELECTRICAL		
Standard	UL	IEC
Rated voltage	300V	450V
Rated current	15A	20A
Wire range	28~14AWG	2.5mm²
Contact resistance	20mΩ	
Insulation resistance	500MΩ/DC500V	
Withstanding voltage	AC2000V/1Min	
MECHANICAL		
Temp. range	-40℃~+105℃	
Max. soldering	+250℃ for 5 Sec	
Torque	5.10kgf-cm/0.5Nm/4.43Lbin	
Strip length	7~8mm	

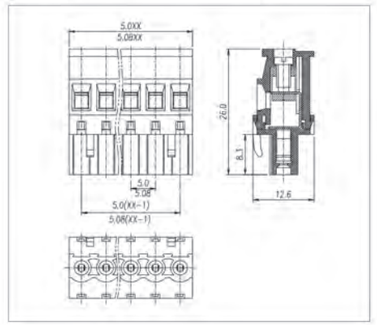

Pitch:7.50/7.62mm

MODEL:JL2EDGKA-7.5/7.62

认证/CERTIFICATION		
材质及电镀		
螺丝	M3.0, 钢, 镀锌	
夹片	磷青铜, 镀镍	
方块	黄铜, 镀镍	
塑件	PA66, UL94V-0	
电气性能		
参考标准	UL	IEC
额定电压	300V	450V
额定电流	15A	20A
使用线径	28~14AWG	2.5mm²
接触电阻	20mΩ	
绝缘电阻	500MΩ/DC500V	
耐电压	AC2000V/1Min	
机械性能		
温度范围	-40℃~+105℃	
瞬时温度	+250℃ 5秒	
扭矩	5.10kgf-cm/0.5Nm/4.43Lbin	
剥线长度	7-8mm	

MATERIAL		
Screws	M3.0 Steel Zn plated	
Clamp	Phosphor bronze, Ni plated	
Cage	Brass, Ni plated	
Housing	PA66, UL94V-0	
ELECTRICAL		
Standard	UL	IEC
Rated voltage	300V	450V
Rated current	15A	20A
Wire range	28~14AWG	2.5mm²
Contact resistance	20mΩ	
Insulation resistance	500MΩ/DC500V	
Withstanding voltage	AC2000V/1Min	
MECHANICAL		
Temp. range	-40℃~+105℃	
Max. soldering	+250℃ for 5 Sec	
Torque	5.10kgf-cm/0.5Nm/4.43Lbin	
Strip length	7~8mm	

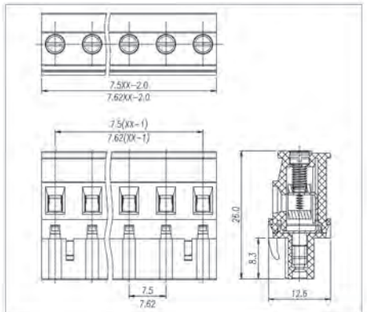

Pitch:5.0/5.08mm

MODEL:JL2EDGKAM-5.0/5.08

认证/CERTIFICATION		
材质及电镀		
螺丝	M3.0, 钢, 镀锌	
夹片	磷青铜, 镀镍	
方块	黄铜, 镀镍	
塑件	PA66, UL94V-0	
电气性能		
参考标准	UL	IEC
额定电压	300V	450V
额定电流	15A	20A
使用线径	28~14AWG	2.5mm²
接触电阻	20mΩ	
绝缘电阻	500MΩ/DC500V	
耐电压	AC2000V/1Min	
机械性能		
温度范围	-40℃~+105℃	
瞬时温度	+250℃ 5秒	
扭矩	5.10kgf-cm/0.5Nm/4.43Lbin	
剥线长度	7-8mm	

MATERIAL		
Screws	M3.0 Steel Zn plated	
Clamp	Phosphor bronze, Ni plated	
Cage	Brass, Ni plated	
Housing	PA66, UL94V-0	
ELECTRICAL		
Standard	UL	IEC
Rated voltage	300V	450V
Rated current	15A	20A
Wire range	28~14AWG	2.5mm²
Contact resistance	20mΩ	
Insulation resistance	500MΩ/DC500V	
Withstanding voltage	AC2000V/1Min	
MECHANICAL		
Temp. range	-40℃~+105℃	
Max. soldering	+250℃ for 5 Sec	
Torque	5.10kgf-cm/0.5Nm/4.43Lbin	
Strip length	7~8mm	

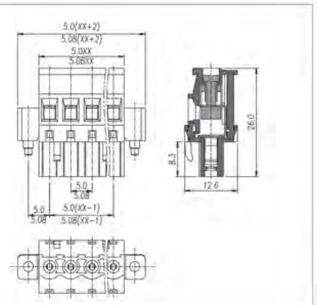

Pitch:7.50/7.62mm

MODEL:JL2EDGKAM7.5/7.62

认证/CERTIFICATION		
材质及电镀		
螺丝	M3.0, 钢, 镀锌	
夹片	磷青铜, 镀镍	
方块	黄铜, 镀镍	
塑件	PA66, UL94V-0	
电气性能		
参考标准	UL	IEC
额定电压	300V	450V
额定电流	15A	20A
使用线径	28~14AWG	2.5mm²
接触电阻	20mΩ	
绝缘电阻	500MΩ/DC500V	
耐电压	AC2000V/1Min	
机械性能		
温度范围	-40℃~+105℃	
瞬时温度	+250℃ 5秒	
扭矩	5.10kgf-cm/0.5Nm/4.43Lbin	
剥线长度	7-8mm	

MATERIAL		
Screws	M3.0 Steel Zn plated	
Clamp	Phosphor bronze, Ni plated	
Cage	Brass, Ni plated	
Housing	PA66, UL94V-0	
ELECTRICAL		
Standard	UL	IEC
Rated voltage	300V	450V
Rated current	15A	20A
Wire range	28~14AWG	2.5mm²
Contact resistance	20mΩ	
Insulation resistance	500MΩ/DC500V	
Withstanding voltage	AC2000V/1Min	
MECHANICAL		
Temp. range	-40℃~+105℃	
Max. soldering	+250℃ for 5 Sec	
Torque	5.10kgf-cm/0.5Nm/4.43Lbin	
Strip length	7~8mm	

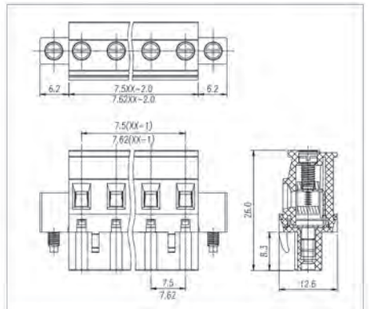

Pitch:5.0/5.08mm

MODEL:JL2EDGKB-5.0/5.08

认证/CERTIFICATION		
材质及电镀		
螺丝	M3.0, 钢, 镀锌	
夹片	磷青铜, 镀镍	
方块	黄铜, 镀镍	
塑件	PA66, UL94V-0	
电气性能		
参考标准	UL	IEC
额定电压	300V	450V
额定电流	15A	20A
使用线径	28~14AWG	2.5mm²
接触电阻	20mΩ	
绝缘电阻	500MΩ/DC500V	
耐电压	AC2000V/1Min	
机械性能		
温度范围	-40℃~+105℃	
瞬时温度	+250℃ 5秒	
扭矩	5.10kgf-cm/0.5Nm/4.43Lbin	
剥线长度	7-8mm	

MATERIAL		
Screws	M3.0 Steel Zn plated	
Clamp	Phosphor bronze, Ni plated	
Cage	Brass, Ni plated	
Housing	PA66, UL94V-0	
ELECTRICAL		
Standard	UL	IEC
Rated voltage	300V	450V
Rated current	15A	20A
Wire range	28~14AWG	2.5mm²
Contact resistance	20mΩ	
Insulation resistance	500MΩ/DC500V	
Withstanding voltage	AC2000V/1Min	
MECHANICAL		
Temp. range	-40℃~+105℃	
Max. soldering	+250℃ for 5 Sec	
Torque	5.10kgf-cm/0.5Nm/4.43Lbin	
Strip length	7~8mm	

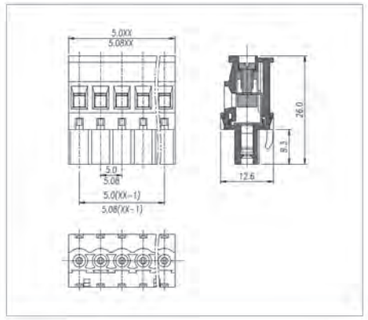

Pitch:7.50/7.62mm

MODEL:JL2EDGKB-7.5/7.62

认证/CERTIFICATION		
材质及电镀		
螺丝	M3.0, 钢, 镀锌	
夹片	磷青铜, 镀镍	
方块	黄铜, 镀镍	
塑件	PA66, UL94V-0	
电气性能		
参考标准	UL	IEC
额定电压	300V	450V
额定电流	15A	20A
使用线径	28~14AWG	2.5mm²
接触电阻	20mΩ	
绝缘电阻	500MΩ/DC500V	
耐电压	AC2000V/1Min	
机械性能		
温度范围	-40℃~+105℃	
瞬时温度	+250℃ 5秒	
扭矩	5.10kgf-cm/0.5Nm/4.43Lbin	
剥线长度	7-8mm	

MATERIAL		
Screws	M3.0 Steel Zn plated	
Clamp	Phosphor bronze, Ni plated	
Cage	Brass, Ni plated	
Housing	PA66, UL94V-0	
ELECTRICAL		
Standard	UL	IEC
Rated voltage	300V	450V
Rated current	15A	20A
Wire range	28~14AWG	2.5mm²
Contact resistance	20mΩ	
Insulation resistance	500MΩ/DC500V	
Withstanding voltage	AC2000V/1Min	
MECHANICAL		
Temp. range	-40℃~+105℃	
Max. soldering	+250℃ for 5 Sec	
Torque	5.10kgf-cm/0.5Nm/4.43Lbin	
Strip length	7~8mm	

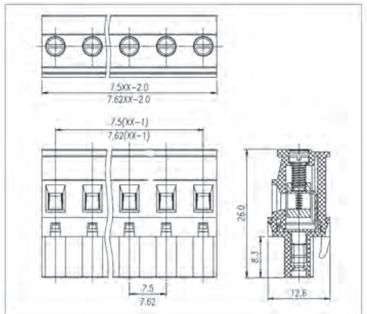

Pitch:5.0/5.08mm

MODEL:JL2EDGKBM-5.0/5.08

认证/CERTIFICATION		
材质及电镀		
螺丝	M3.0, 钢, 镀锌	
夹片	磷青铜, 镀镍	
方块	黄铜, 镀镍	
塑件	PA66, UL94V-0	
电气性能		
参考标准	UL	IEC
额定电压	300V	450V
额定电流	15A	20A
使用线径	28~14AWG	2.5mm²
接触电阻	20mΩ	
绝缘电阻	500MΩ/DC500V	
耐电压	AC2000V/1Min	
机械性能		
温度范围	-40℃~+105℃	
瞬时温度	+250℃ 5秒	
扭矩	5.10kgf-cm/0.5Nm/4.43Lbin	
剥线长度	7-8mm	

MATERIAL		
Screws	M3.0 Steel Zn plated	
Clamp	Phosphor bronze, Ni plated	
Cage	Brass, Ni plated	
Housing	PA66, UL94V-0	
ELECTRICAL		
Standard	UL	IEC
Rated voltage	300V	450V
Rated current	15A	20A
Wire range	28~14AWG	2.5mm²
Contact resistance	20mΩ	
Insulation resistance	500MΩ/DC500V	
Withstanding voltage	AC2000V/1Min	
MECHANICAL		
Temp. range	-40℃~+105℃	
Max. soldering	+250℃ for 5 Sec	
Torque	5.10kgf-cm/0.5Nm/4.43Lbin	
Strip length	7~8mm	

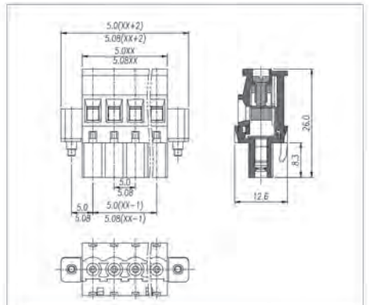

Pitch:7.50/7.62mm

MODEL:JL2EDGKBM-7.5/7.62

认证/CERTIFICATION		
材质及电镀		
螺丝	M3.0, 钢, 镀锌	
夹片	磷青铜, 镀镍	
方块	黄铜, 镀镍	
塑件	PA66, UL94V-0	
电气性能		
参考标准	UL	IEC
额定电压	300V	450V
额定电流	15A	20A
使用线径	28~14AWG	2.5mm²
接触电阻	20mΩ	
绝缘电阻	500MΩ/DC500V	
耐电压	AC2000V/1Min	
机械性能		
温度范围	-40℃~+105℃	
瞬时温度	+250℃ 5秒	
扭矩	5.10kgf-cm/0.5Nm/4.43Lbin	
剥线长度	7-8mm	

MATERIAL		
Screws	M3.0 Steel Zn plated	
Clamp	Phosphor bronze, Ni plated	
Cage	Brass, Ni plated	
Housing	PA66, UL94V-0	
ELECTRICAL		
Standard	UL	IEC
Rated voltage	300V	450V
Rated current	15A	20A
Wire range	28~14AWG	2.5mm²
Contact resistance	20mΩ	
Insulation resistance	500MΩ/DC500V	
Withstanding voltage	AC2000V/1Min	
MECHANICAL		
Temp. range	-40℃~+105℃	
Max. soldering	+250℃ for 5 Sec	
Torque	5.10kgf-cm/0.5Nm/4.43Lbin	
Strip length	7-8mm	

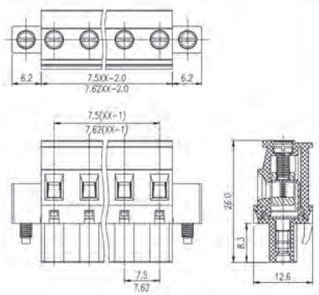

Pitch:5.0/5.08mm

MODEL:JL2EDGKC

认证/CERTIFICATION		
材质及电镀		
螺丝	M2.0, 钢, 镀锌	
夹片	磷青铜, 镀镍	
方块	黄铜, 镀镍	
滑块	碳钢, 镀锌	
塑件	PA66, UL94V-0	
电气性能		
参考标准	UL	IEC
额定电压	300V	450V
额定电流	15A	20A
使用线径	28~14AWG	2.5mm²
接触电阻	20mΩ	
绝缘电阻	500MΩ/DC500V	
耐电压	AC2000V/1Min	
机械性能		
温度范围	-40℃~+105℃	
瞬时温度	+250℃ 5秒	
扭矩	5.1kgf-cm/0.5Nm/4.43Lbin	
剥线长度	7-8mm	

MATERIAL		
Screws	M2.0 Steel Zn plated	
Clamp	Phosphor bronze, Ni plated	
Cage	Brass, Ni plated	
Slide block	Steel Zn plated	
Housing	PA66, UL94V-0	
ELECTRICAL		
Standard	UL	IEC
Rated voltage	300V	450V
Rated current	15A	20A
Wire range	28~14AWG	2.5mm²
Contact resistance	20mΩ	
Insulation resistance	500MΩ/DC500V	
Withstanding voltage	AC2000V/1Min	
MECHANICAL		
Temp. range	-40℃~+105℃	
Max. soldering	+250℃ for 5 Sec	
Torque	5.1kgf-cm/0.5Nm/4.43Lbin	
Strip length	7-8mm	

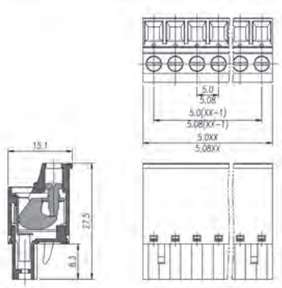

Pitch:5.0/5.08mm

MODEL:JL2EDGKCM

认证/CERTIFICATION		
材质及电镀		
螺丝	M2.0, 钢, 镀锌	
夹片	磷青铜, 镀镍	
方块	黄铜, 镀镍	
滑块	碳钢, 镀锌	
塑件	PA66, UL94V-0	
电气性能		
参考标准	UL	IEC
额定电压	300V	450V
额定电流	15A	20A
使用线径	28~14AWG	2.5mm²
接触电阻	20mΩ	
绝缘电阻	500MΩ/DC500V	
耐电压	AC2000V/1Min	
机械性能		
温度范围	-40℃~+105℃	
瞬时温度	+250℃ 5秒	
扭矩	5.1kgf-cm/0.5Nm/4.43Lbin	
剥线长度	7-8mm	

MATERIAL		
Screws	M2.0 Steel Zn plated	
Clamp	Phosphor bronze, Ni plated	
Cage	Brass, Ni plated	
Slide block	Steel Zn plated	
Housing	PA66, UL94V-0	
ELECTRICAL		
Standard	UL	IEC
Rated voltage	300V	450V
Rated current	15A	20A
Wire range	28~14AWG	2.5mm²
Contact resistance	20mΩ	
Insulation resistance	500MΩ/DC500V	
Withstanding voltage	AC2000V/1Min	
MECHANICAL		
Temp. range	-40℃~+105℃	
Max. soldering	+250℃ for 5 Sec	
Torque	5.1kgf-cm/0.5Nm/4.43Lbin	
Strip length	7-8mm	

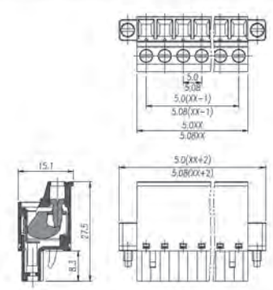

Pitch:5.08mm

MODEL:JL2EDGKD

认证/CERTIFICATION		
材质及电镀		
夹子	磷青铜, 镀镍	
弹片	不锈钢	
塑件	PA66, UL94V-0	
电气性能		
参考标准	UL	IEC
额定电压	300V	450V
额定电流	15A	20A
使用线径	28~14AWG	2.5mm²
接触电阻	20mΩ	
绝缘电阻	500MΩ/DC500V	
耐电压	AC2000V/1Min	
机械性能		
温度范围	-40℃~+105℃	
剥线长度	7-8mm	

MATERIAL		
Clamp	Phosphor bronze, Ni plated	
Shrapnel	Stainless steel	
Housing	PA66, UL94V-0	
ELECTRICAL		
Standard	UL	IEC
Rated voltage	300V	450V
Rated current	15A	20A
Wire range	28~14AWG	2.5mm²
Contact resistance	20mΩ	
Insulation resistance	500MΩ/DC500V	
Withstanding voltage	AC2000V/1Min	
MECHANICAL		
Temp. range	-40℃~+105℃	
Strip length	7-8mm	

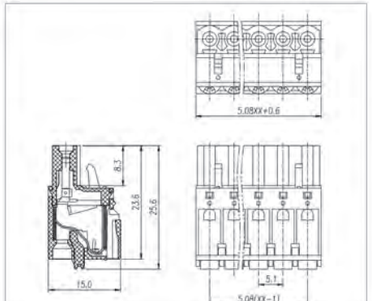

Pitch:5.08mm

MODEL:JL2EDGKDM

认证/CERTIFICATION		
材质及电镀		
夹子	磷青铜, 镀镍	
弹片	不锈钢	
塑件	PA66, UL94V-0	
电气性能		
参考标准	UL	IEC
额定电压	300V	450V
额定电流	15A	20A
使用线径	28~14AWG	2.5mm²
接触电阻	20mΩ	
绝缘电阻	500MΩ/DC500V	
耐电压	AC2000V/1Min	
机械性能		
温度范围	-40℃~+105℃	
剥线长度	7-8mm	

MATERIAL		
Clamp	Phosphor bronze, Ni plated	
Shrapnel	Stainless steel	
Housing	PA66, UL94V-0	
ELECTRICAL		
Standard	UL	IEC
Rated voltage	300V	450V
Rated current	15A	20A
Wire range	28~14AWG	2.5mm²
Contact resistance	20mΩ	
Insulation resistance	500MΩ/DC500V	
Withstanding voltage	AC2000V/1Min	
MECHANICAL		
Temp. range	-40℃~+105℃	
Strip length	7-8mm	

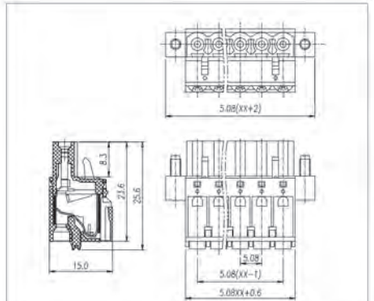

Pitch:5.08mm

MODEL:JL2EDGKDG

认证/CERTIFICATION		
材质及电镀		
夹子	磷青铜, 镀镍	
弹片	不锈钢	
塑件	PA66, UL94V-0	
电气性能		
参考标准	UL	IEC
额定电压	300V	450V
额定电流	15A	20A
使用线径	28~14AWG	2.5mm²
接触电阻	20mΩ	
绝缘电阻	500MΩ/DC500V	
耐电压	AC2000V/1Min	
机械性能		
温度范围	-40℃~+105℃	
剥线长度	7-8mm	

MATERIAL		
Clamp	Phosphor bronze, Ni plated	
Shrapnel	Stainless steel	
Housing	PA66, UL94V-0	
ELECTRICAL		
Standard	UL	IEC
Rated voltage	300V	450V
Rated current	15A	20A
Wire range	28~14AWG	2.5mm²
Contact resistance	20mΩ	
Insulation resistance	500MΩ/DC500V	
Withstanding voltage	AC2000V/1Min	
MECHANICAL		
Temp. range	-40℃~+105℃	
Strip length	7-8mm	

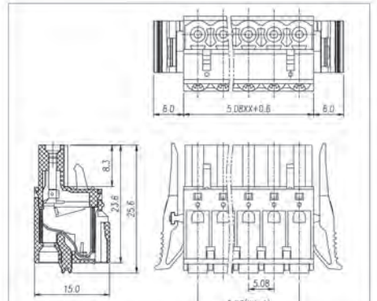

Pitch:5.0mm

MODEL:JL2EDGKF

认证/CERTIFICATION

材质及电镀		
螺丝	M3.0, 钢, 镀锌	
夹片	磷青铜, 镀镍	
方块	黄铜, 镀镍	
塑件	PA66, UL94V-0	
电气性能		
参考标准	UL	IEC
额定电压	300V	450V
额定电流	15A	20A
使用线径	28~14AWG	2.5mm²
接触电阻	20mΩ	
绝缘电阻	500MΩ/DC500V	
耐电压	AC2000V/1Min	
机械性能		
温度范围	-40℃~+105℃	
瞬时温度	+250℃ 5秒	
扭矩	5.10kgf-cm/0.5Nm/4.43Lbin	
剥线长度	7-8mm	

MATERIAL		
Screws	M3.0 Steel Zn plated	
Clamp	Phosphor bronze, Ni plated	
Cage	Brass, Ni plated	
Housing	PA66, UL94V-0	
ELECTRICAL		
Standard	UL	IEC
Rated voltage	300V	450V
Rated current	15A	20A
Wire range	28~14AWG	2.5mm²
Contact resistance	20mΩ	
Insulation resistance	500MΩ/DC500V	
Withstanding voltage	AC2000V/1Min	
MECHANICAL		
Temp. range	-40℃~+105℃	
Max. soldering	+250℃ for 5 Sec	
Torque	5.10kgf-cm/0.5Nm/4.43Lbin	
Strip length	7~8mm	

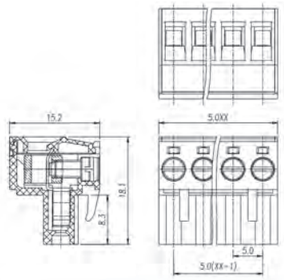

Pitch:5.0/5.08mm

MODEL:JL2EDGKZ

认证/CERTIFICATION

材质及电镀		
螺丝	M3.0, 钢, 镀锌	
夹片	磷青铜, 镀镍	
方块	黄铜, 镀镍	
塑件	PA66, UL94V-0	
电气性能		
参考标准	UL	IEC
额定电压	300V	450V
额定电流	15A	20A
使用线径	28~14AWG	2.5mm²
接触电阻	20mΩ	
绝缘电阻	500MΩ/DC500V	
耐电压	AC2000V/1Min	
机械性能		
温度范围	-40℃~+105℃	
瞬时温度	+250℃ 5秒	
扭矩	5.10kgf-cm/0.5Nm/4.43Lbin	
剥线长度	7-8mm	

MATERIAL		
Screws	M3.0 Steel Zn plated	
Clamp	Phosphor bronze, Ni plated	
Cage	Brass, Ni plated	
Housing	PA66, UL94V-0	
ELECTRICAL		
Standard	UL	IEC
Rated voltage	300V	450V
Rated current	15A	20A
Wire range	28~14AWG	2.5mm²
Contact resistance	20mΩ	
Insulation resistance	500MΩ/DC500V	
Withstanding voltage	AC2000V/1Min	
MECHANICAL		
Temp. range	-40℃~+105℃	
Max. soldering	+250℃ for 5 Sec	
Torque	5.10kgf-cm/0.5Nm/4.43Lbin	
Strip length	7~8mm	

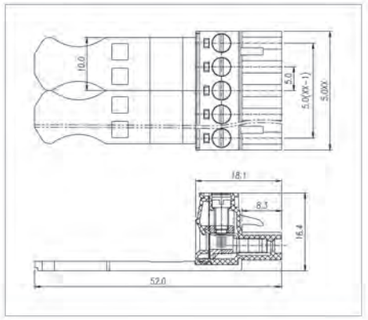

Pitch:5.0/5.08mm

MODEL:JL2EDGKL

认证/CERTIFICATION

材质及电镀		
螺丝	M3.0, 钢, 镀锌	
夹片	磷青铜, 镀镍	
方块	黄铜, 镀镍	
塑件	PA66, UL94V-0	
电气性能		
参考标准	UL	IEC
额定电压	300V	450V
额定电流	15A	20A
使用线径	28~14AWG	2.5mm²
接触电阻	20mΩ	
绝缘电阻	500MΩ/DC500V	
耐电压	AC2000V/1Min	
机械性能		
温度范围	-40℃~+105℃	
瞬时温度	+250℃ 5秒	
扭矩	5.10kgf-cm/0.5Nm/4.43Lbin	
剥线长度	7-8mm	

MATERIAL		
Screws	M3.0 Steel Zn plated	
Clamp	Phosphor bronze, Ni plated	
Cage	Brass, Ni plated	
Housing	PA66, UL94V-0	
ELECTRICAL		
Standard	UL	IEC
Rated voltage	300V	450V
Rated current	15A	20A
Wire range	28~14AWG	2.5mm²
Contact resistance	20mΩ	
Insulation resistance	500MΩ/DC500V	
Withstanding voltage	AC2000V/1Min	
MECHANICAL		
Temp. range	-40℃~+105℃	
Max. soldering	+250℃ for 5 Sec	
Torque	5.10kgf-cm/0.5Nm/4.43Lbin	
Strip length	7~8mm	

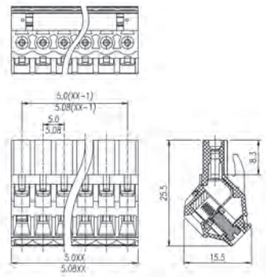

Pitch:5.0/5.08mm

MODEL:JL2EDGKLM

认证/CERTIFICATION

材质及电镀		
螺丝	M3.0, 钢, 镀锌	
夹片	磷青铜, 镀镍	
方块	黄铜, 镀镍	
塑件	PA66, UL94V-0	
电气性能		
参考标准	UL	IEC
额定电压	300V	450V
额定电流	15A	20A
使用线径	28~14AWG	2.5mm²
接触电阻	20mΩ	
绝缘电阻	500MΩ/DC500V	
耐电压	AC2000V/1Min	
机械性能		
温度范围	-40℃~+105℃	
瞬时温度	+250℃ 5秒	
扭矩	5.10kgf-cm/0.5Nm/4.43Lbin	
剥线长度	7-8mm	

MATERIAL		
Screws	M3.0 Steel Zn plated	
Clamp	Phosphor bronze, Ni plated	
Cage	Brass, Ni plated	
Housing	PA66, UL94V-0	
ELECTRICAL		
Standard	UL	IEC
Rated voltage	300V	450V
Rated current	15A	20A
Wire range	28~14AWG	2.5mm²
Contact resistance	20mΩ	
Insulation resistance	500MΩ/DC500V	
Withstanding voltage	AC2000V/1Min	
MECHANICAL		
Temp. range	-40℃~+105℃	
Max. soldering	+250℃ for 5 Sec	
Torque	5.10kgf-cm/0.5Nm/4.43Lbin	
Strip length	7~8mm	

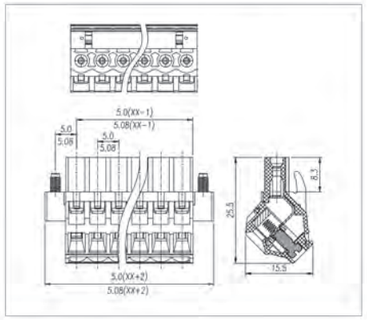

Pitch:5.0/5.08mm

MODEL:JL2EDGA

认证/CERTIFICATION

材质及电镀		
焊针	磷青铜, 镀锡	
塑件	PA66, UL94V-0	
电气性能		
参考标准	UL	IEC
额定电压	300V	450V
额定电流	15A	20A
接触电阻	20mΩ	
绝缘电阻	500MΩ/DC500V	
耐电压	AC2000V/1Min	
机械性能		
温度范围	-40℃~+105℃	
瞬时温度	+250℃ 5秒	

MATERIAL		
Pin header	Phosphor bronze, Si plated	
Housing	PA66, UL94V-0	
ELECTRICAL		
Standard	UL	IEC
Rated voltage	300V	450V
Rated current	15A	20A
Contact resistance	20mΩ	
Insulation resistance	500MΩ/DC500V	
Withstanding voltage	AC2000V/1Min	
MECHANICAL		
Temp. range	-40℃~+105℃	
Max. soldering	+250℃ for 5 Sec	

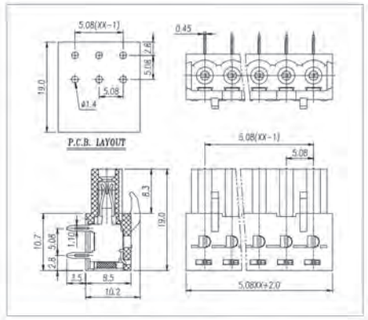

Pitch:5.0/5.08mm

MODEL:JL2EDGAM

认证/CERTIFICATION

材质及电镀		
螺母	M2.5,黄铜	
焊针	磷青铜, 镀锡	
塑件	PA66, UL94V-0	
电气性能		
参考标准	UL	IEC
额定电压	300V	450V
额定电流	15A	20A
接触电阻	20mΩ	
绝缘电阻	500MΩ/DC500V	
耐电压	AC2000V/1Min	
机械性能		
温度范围	-40℃~+105℃	
瞬时温度	+250℃ 5秒	

MATERIAL		
Nut	M2.5,Brass	
Pin header	Phosphor bronze, Si plated	
Housing	PA66, UL94V-0	
ELECTRICAL		
Standard	UL	IEC
Rated voltage	300V	450V
Rated current	15A	20A
Contact resistance	20mΩ	
Insulation resistance	500MΩ/DC500V	
Withstanding voltage	AC2000V/1Min	
MECHANICAL		
Temp. range	-40℃~+105℃	
Max. soldering	+250℃ for 5 Sec	

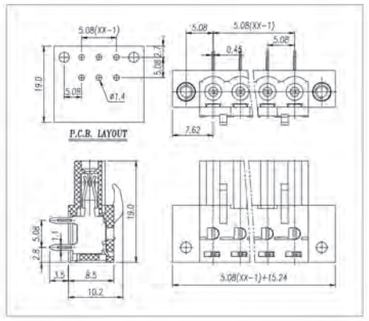

Pitch:5.0/5.08mm

MODEL:JL2EDGB

认证/CERTIFICATION

材质及电镀		
焊针	磷青铜, 镀锡	
塑件	PA66, UL94V-0	
电气性能		
参考标准	UL	IEC
额定电压	300V	450V
额定电流	15A	20A
接触电阻	20mΩ	
绝缘电阻	500MΩ/DC500V	
耐电压	AC2000V/1Min	
机械性能		
温度范围	-40℃~+105℃	
瞬时温度	+250℃ 5秒	

MATERIAL		
Pin header	Phosphor bronze, Si plated	
Housing	PA66, UL94V-0	
ELECTRICAL		
Standard	UL	IEC
Rated voltage	300V	450V
Rated current	15A	20A
Contact resistance	20mΩ	
Insulation resistance	500MΩ/DC500V	
Withstanding voltage	AC2000V/1Min	
MECHANICAL		
Temp. range	-40℃~+105℃	
Max. soldering	+250℃ for 5 Sec	

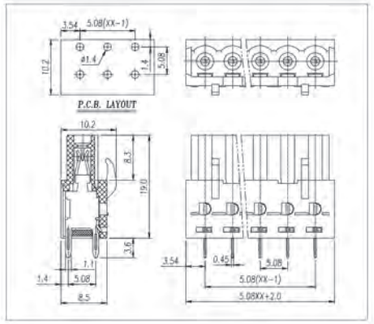

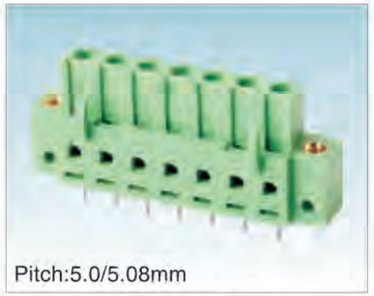

Pitch:5.0/5.08mm

MODEL:JL2EDGBM

认证/CERTIFICATION

材质及电镀		
螺母	M2.5,黄铜	
焊针	磷青铜, 镀锡	
塑件	PA66, UL94V-0	
电气性能		
参考标准	UL	IEC
额定电压	300V	450V
额定电流	15A	20A
接触电阻	20mΩ	
绝缘电阻	500MΩ/DC500V	
耐电压	AC2000V/1Min	
机械性能		
温度范围	-40℃~+105℃	
瞬时温度	+250℃ 5秒	

MATERIAL		
Nut	M2.5,Brass	
Pin header	Phosphor bronze, Si plated	
Housing	PA66, UL94V-0	
ELECTRICAL		
Standard	UL	IEC
Rated voltage	300V	450V
Rated current	15A	20A
Contact resistance	20mΩ	
Insulation resistance	500MΩ/DC500V	
Withstanding voltage	AC2000V/1Min	
MECHANICAL		
Temp. range	-40℃~+105℃	
Max. soldering	+250℃ for 5 Sec	

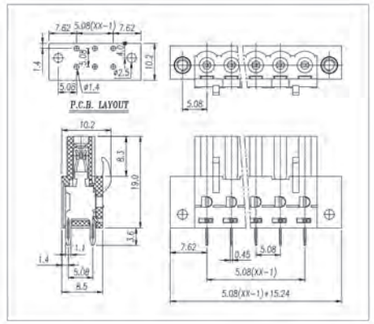

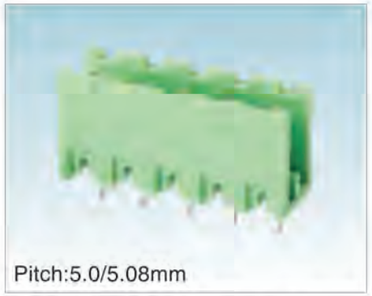

Pitch:5.0/5.08mm

MODEL:JL2EDGV-5.0/5.08

认证/CERTIFICATION

材质及电镀		
焊针	黄铜, 镀锡	
塑件	PA66, UL94V-0	
电气性能		
参考标准	UL	IEC
额定电压	300V	450V
额定电流	15A	20A
接触电阻	20mΩ	
绝缘电阻	500MΩ/DC500V	
耐电压	AC2000V/1Min	
机械性能		
温度范围	-40℃~+105℃	
瞬时温度	+250℃ 5秒	

MATERIAL		
Pin header	Brass, Sn plated	
Housing	PA66, UL94V-0	
ELECTRICAL		
Standard	UL	IEC
Rated voltage	300V	450V
Rated current	15A	20A
Contact resistance	20mΩ	
Insulation resistance	500MΩ/DC500V	
Withstanding voltage	AC2000V/1Min	
MECHANICAL		
Temp. range	-40℃~+105℃	
Max. soldering	+250℃ for 5 Sec	

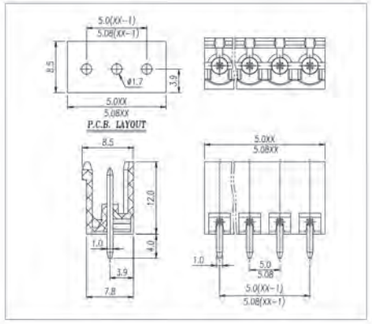

Pitch:7.50/7.62mm

MODEL:JL2EDGV-7.5/7.62

认证/CERTIFICATION

材质及电镀		
焊针	黄铜, 镀锡	
塑件	PA66, UL94V-0	
电气性能		
参考标准	UL	IEC
额定电压	300V	450V
额定电流	15A	20A
接触电阻	20mΩ	
绝缘电阻	500MΩ/DC500V	
耐电压	AC2000V/1Min	
机械性能		
温度范围	-40℃~+105℃	
瞬时温度	+250℃ 5秒	

MATERIAL		
Pin header	Brass, Sn plated	
Housing	PA66, UL94V-0	
ELECTRICAL		
Standard	UL	IEC
Rated voltage	300V	450V
Rated current	15A	20A
Contact resistance	20mΩ	
Insulation resistance	500MΩ/DC500V	
Withstanding voltage	AC2000V/1Min	
MECHANICAL		
Temp. range	-40℃~+105℃	
Max. soldering	+250℃ for 5 Sec	

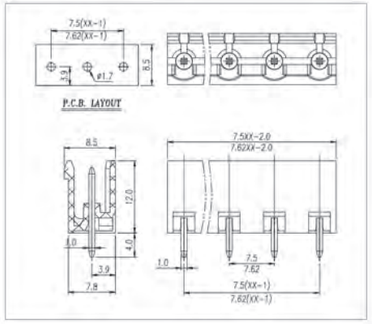

Pitch:10.0/10.16mm

MODEL:JL2EDGV-10.0/10.16

认证/CERTIFICATION

材质及电镀		
焊针	黄铜, 镀锡	
塑件	PA66, UL94V-0	
电气性能		
参考标准	UL	IEC
额定电压	600V	750V
额定电流	15A	20A
接触电阻	20mΩ	
绝缘电阻	500MΩ/DC500V	
耐电压	AC2000V/1Min	
机械性能		
温度范围	-40℃~+105℃	
瞬时温度	+250℃ 5秒	

MATERIAL		
Pin header	Brass, Sn plated	
Housing	PA66, UL94V-0	
ELECTRICAL		
Standard	UL	IEC
Rated voltage	600V	750V
Rated current	15A	20A
Contact resistance	20mΩ	
Insulation resistance	500MΩ/DC500V	
Withstanding voltage	AC2000V/1Min	
MECHANICAL		
Temp. range	-40℃~+105℃	
Max. soldering	+250℃ for 5 Sec	

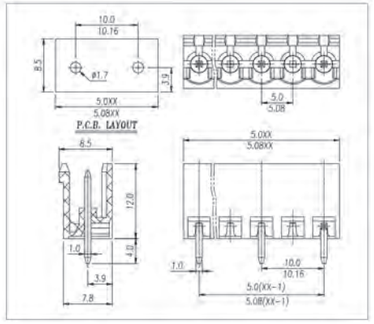

Pitch:5.0/5.08mm

MODEL:JL2EDGR-5.0/5.08

认证/CERTIFICATION

材质及电镀		
焊针	黄铜, 镀锡	
塑件	PA66, UL94V-0	
电气性能		
参考标准	UL	IEC
额定电压	300V	450V
额定电流	15A	20A
接触电阻	20mΩ	
绝缘电阻	500MΩ/DC500V	
耐电压	AC2000V/1Min	
机械性能		
温度范围	-40℃~+105℃	
瞬时温度	+250℃ 5秒	

MATERIAL		
Pin header	Brass, Sn plated	
Housing	PA66, UL94V-0	
ELECTRICAL		
Standard	UL	IEC
Rated voltage	300V	450V
Rated current	15A	20A
Contact resistance	20mΩ	
Insulation resistance	500MΩ/DC500V	
Withstanding voltage	AC2000V/1Min	
MECHANICAL		
Temp. range	-40℃~+105℃	
Max. soldering	+250℃ for 5 Sec	

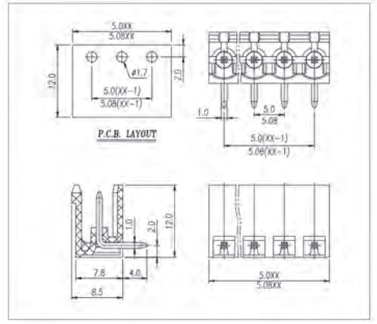

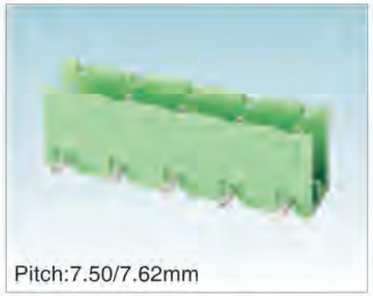

Pitch:7.50/7.62mm

MODEL:JL2EDGR-7.5/7.62

认证/CERTIFICATION

材质及电镀		
焊针	黄铜, 镀锡	
塑件	PA66, UL94V-0	
电气性能		
参考标准	UL	IEC
额定电压	300V	450V
额定电流	15A	20A
接触电阻	20mΩ	
绝缘电阻	500MΩ/DC500V	
耐电压	AC2000V/1Min	
机械性能		
温度范围	-40℃~+105℃	
瞬时温度	+250℃ 5秒	

MATERIAL		
Pin header	Brass, Sn plated	
Housing	PA66, UL94V-0	
ELECTRICAL		
Standard	UL	IEC
Rated voltage	300V	450V
Rated current	15A	20A
Contact resistance	20mΩ	
Insulation resistance	500MΩ/DC500V	
Withstanding voltage	AC2000V/1Min	
MECHANICAL		
Temp. range	-40℃~+105℃	
Max. soldering	+250℃ for 5 Sec	

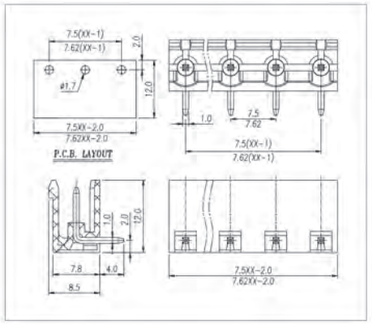

Pitch:10.0/10.16mm

MODEL:JL2EDGR-10.0/10.16

认证/CERTIFICATION

材质及电镀		
焊针	黄铜, 镀锡	
塑件	PA66, UL94V-0	
电气性能		
参考标准	UL	IEC
额定电压	600V	750V
额定电流	15A	20A
接触电阻	20mΩ	
绝缘电阻	500MΩ/DC500V	
耐电压	AC2000V/1Min	
机械性能		
温度范围	-40℃~+105℃	
瞬时温度	+250℃ 5秒	

MATERIAL		
Pin header	Brass, Sn plated	
Housing	PA66, UL94V-0	
ELECTRICAL		
Standard	UL	IEC
Rated voltage	600V	750V
Rated current	15A	20A
Contact resistance	20mΩ	
Insulation resistance	500MΩ/DC500V	
Withstanding voltage	AC2000V/1Min	
MECHANICAL		
Temp. range	-40℃~+105℃	
Max. soldering	+250℃ for 5 Sec	

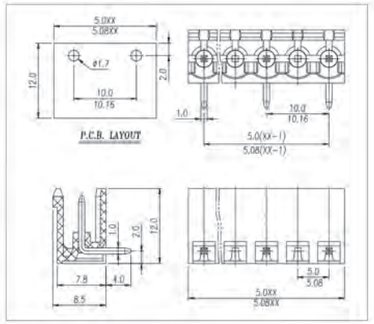

Pitch:5.0/5.08mm

MODEL:JL2EDGVC-5.0/5.08

认证/CERTIFICATION

材质及电镀		
焊针	黄铜, 镀锡	
塑件	PA66, UL94V-0	
电气性能		
参考标准	UL	IEC
额定电压	300V	450V
额定电流	15A	20A
接触电阻	20mΩ	
绝缘电阻	500MΩ/DC500V	
耐电压	AC2000V/1Min	
机械性能		
温度范围	-40℃~+105℃	
瞬时温度	+250℃ 5秒	

MATERIAL		
Pin header	Brass, Sn plated	
Housing	PA66, UL94V-0	
ELECTRICAL		
Standard	UL	IEC
Rated voltage	300V	450V
Rated current	15A	20A
Contact resistance	20mΩ	
Insulation resistance	500MΩ/DC500V	
Withstanding voltage	AC2000V/1Min	
MECHANICAL		
Temp. range	-40℃~+105℃	
Max. soldering	+250℃ for 5 Sec	

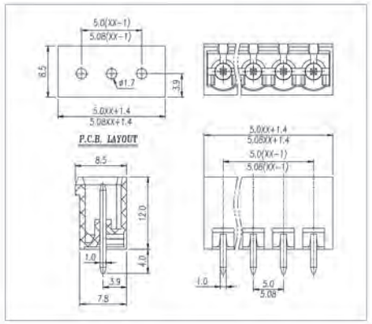

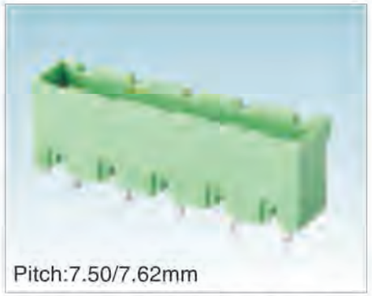

Pitch:7.50/7.62mm

MODEL:JL2EDGVC-7.5/7.62

认证/CERTIFICATION

材质及电镀		
焊针	黄铜, 镀锡	
塑件	PA66, UL94V-0	
电气性能		
参考标准	UL	IEC
额定电压	300V	450V
额定电流	15A	20A
接触电阻	20mΩ	
绝缘电阻	500MΩ/DC500V	
耐电压	AC2000V/1Min	
机械性能		
温度范围	-40℃~+105℃	
瞬时温度	+250℃ 5秒	

MATERIAL		
Pin header	Brass, Sn plated	
Housing	PA66, UL94V-0	
ELECTRICAL		
Standard	UL	IEC
Rated voltage	300V	450V
Rated current	15A	20A
Contact resistance	20mΩ	
Insulation resistance	500MΩ/DC500V	
Withstanding voltage	AC2000V/1Min	
MECHANICAL		
Temp. range	-40℃~+105℃	
Max. soldering	+250℃ for 5 Sec	

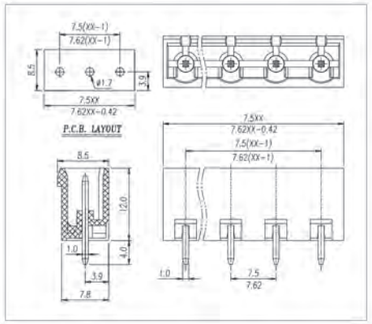

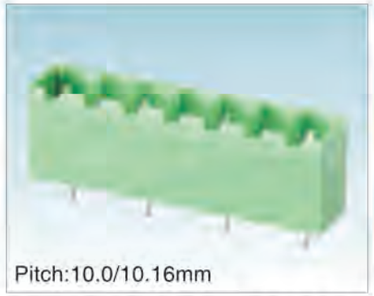

Pitch:10.0/10.16mm

MODEL:JL2EDGVC-10.0/10.16

认证/CERTIFICATION

材质及电镀		
焊针	黄铜, 镀锡	
塑件	PA66, UL94V-0	
电气性能		
参考标准	UL	IEC
额定电压	600V	750V
额定电流	15A	20A
接触电阻	20mΩ	
绝缘电阻	500MΩ/DC500V	
耐电压	AC2000V/1Min	
机械性能		
温度范围	-40℃~+105℃	
瞬时温度	+250℃ 5秒	

MATERIAL		
Pin header	Brass, Sn plated	
Housing	PA66, UL94V-0	
ELECTRICAL		
Standard	UL	IEC
Rated voltage	600V	750V
Rated current	15A	20A
Contact resistance	20mΩ	
Insulation resistance	500MΩ/DC500V	
Withstanding voltage	AC2000V/1Min	
MECHANICAL		
Temp. range	-40℃~+105℃	
Max. soldering	+250℃ for 5 Sec	

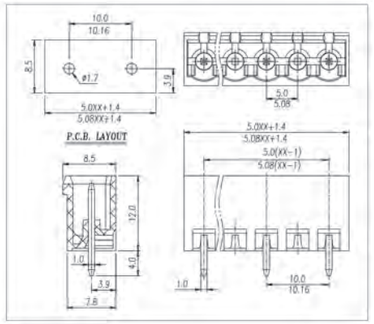

Pitch:5.0/5.08mm

MODEL:JL2EDGRC-5.0/5.08

认证/CERTIFICATION

材质及电镀		
焊针	黄铜, 镀锡	
塑件	PA66, UL94V-0	
电气性能		
参考标准	UL	IEC
额定电压	300V	450V
额定电流	15A	20A
接触电阻	20mΩ	
绝缘电阻	500MΩ/DC500V	
耐电压	AC2000V/1Min	
机械性能		
温度范围	-40℃~+105℃	
瞬时温度	+250℃ 5秒	

MATERIAL		
Pin header	Brass, Sn plated	
Housing	PA66, UL94V-0	
ELECTRICAL		
Standard	UL	IEC
Rated voltage	300V	450V
Rated current	15A	20A
Contact resistance	20mΩ	
Insulation resistance	500MΩ/DC500V	
Withstanding voltage	AC2000V/1Min	
MECHANICAL		
Temp. range	-40℃~+105℃	
Max. soldering	+250℃ for 5 Sec	

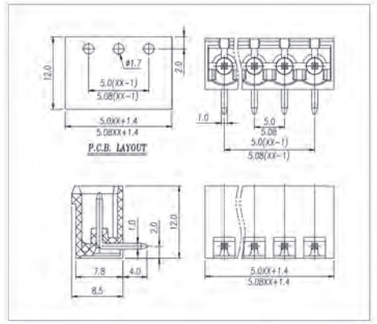

Pitch:7.50/7.62mm

MODEL:JL2EDGRC-7.5/7.62

认证/CERTIFICATION

材质及电镀		
焊针	黄铜, 镀锡	
塑件	PA66, UL94V-0	
电气性能		
参考标准	UL	IEC
额定电压	300V	450V
额定电流	15A	20A
接触电阻	20mΩ	
绝缘电阻	500MΩ/DC500V	
耐电压	AC2000V/1Min	
机械性能		
温度范围	-40℃~+105℃	
瞬时温度	+250℃ 5秒	

MATERIAL		
Pin header	Brass, Sn plated	
Housing	PA66, UL94V-0	
ELECTRICAL		
Standard	UL	IEC
Rated voltage	300V	450V
Rated current	15A	20A
Contact resistance	20mΩ	
Insulation resistance	500MΩ/DC500V	
Withstanding voltage	AC2000V/1Min	
MECHANICAL		
Temp. range	-40℃~+105℃	
Max. soldering	+250℃ for 5 Sec	

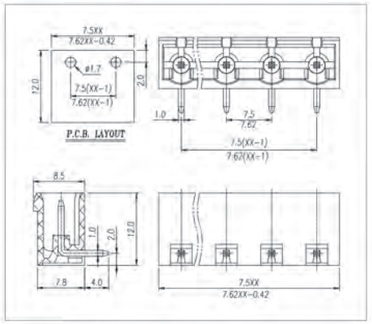

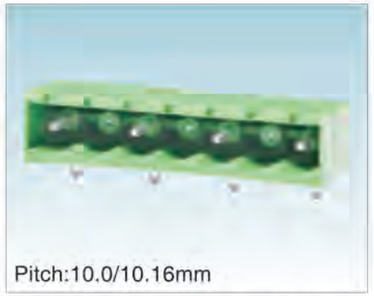

Pitch:10.0/10.16mm

MODEL:JL2EDGRC-10.0/10.16

认证/CERTIFICATION

材质及电镀		
焊针	黄铜, 镀锡	
塑件	PA66, UL94V-0	
电气性能		
参考标准	UL	IEC
额定电压	600V	750V
额定电流	15A	20A
接触电阻	20mΩ	
绝缘电阻	500MΩ/DC500V	
耐电压	AC2000V/1Min	
机械性能		
温度范围	-40℃~+105℃	
瞬时温度	+250℃ 5秒	

MATERIAL		
Pin header	Brass, Sn plated	
Housing	PA66, UL94V-0	
ELECTRICAL		
Standard	UL	IEC
Rated voltage	600V	750V
Rated current	15A	20A
Contact resistance	20mΩ	
Insulation resistance	500MΩ/DC500V	
Withstanding voltage	AC2000V/1Min	
MECHANICAL		
Temp. range	-40℃~+105℃	
Max. soldering	+250℃ for 5 Sec	

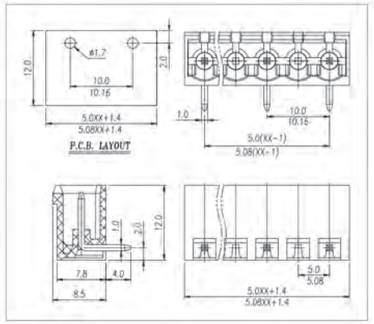

Pitch:5.0/5.08mm

MODEL:JL2EDGVM-5.0/5.08

认证/CERTIFICATION

材质及电镀		
螺母	M2.5,黄铜	
焊针	黄铜, 镀锡	
塑件	PA66, UL94V-0	
电气性能		
参考标准	UL	IEC
额定电压	300V	450V
额定电流	15A	20A
接触电阻	20mΩ	
绝缘电阻	500MΩ/DC500V	
耐电压	AC2000V/1Min	
机械性能		
温度范围	-40℃~+105℃	
瞬时温度	+250℃ 5秒	

MATERIAL		
Nut	M2.5,Brass	
Pin header	Brass, Si plated	
Housing	PA66, UL94V-0	
ELECTRICAL		
Standard	UL	IEC
Rated voltage	300V	450V
Rated current	15A	20A
Contact resistance	20mΩ	
Insulation resistance	500MΩ/DC500V	
Withstanding voltage	AC2000V/1Min	
MECHANICAL		
Temp. range	-40℃~+105℃	
Max. soldering	+250℃ for 5 Sec	

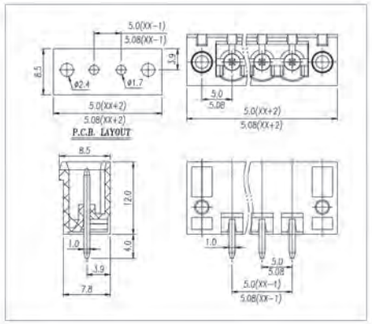

Pitch:7.50/7.62mm

MODEL:JL2EDGVM-7.5/7.62

认证/CERTIFICATION

材质及电镀		
螺母	M2.5,黄铜	
焊针	黄铜, 镀锡	
塑件	PA66, UL94V-0	
电气性能		
参考标准	UL	IEC
额定电压	300V	450V
额定电流	15A	20A
接触电阻	20mΩ	
绝缘电阻	500MΩ/DC500V	
耐电压	AC2000V/1Min	
机械性能		
温度范围	-40℃~+105℃	
瞬时温度	+250℃ 5秒	

MATERIAL		
Nut	M2.5,Brass	
Pin header	Brass, Si plated	
Housing	PA66, UL94V-0	
ELECTRICAL		
Standard	UL	IEC
Rated voltage	300V	450V
Rated current	15A	20A
Contact resistance	20mΩ	
Insulation resistance	500MΩ/DC500V	
Withstanding voltage	AC2000V/1Min	
MECHANICAL		
Temp. range	-40℃~+105℃	
Max. soldering	+250℃ for 5 Sec	

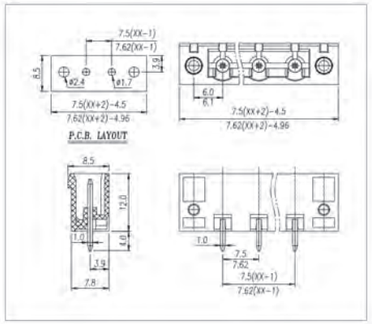

Pitch:10.0/10.16mm

MODEL:JL2EDGVM-10.0/10.16

认证/CERTIFICATION

材质及电镀		
螺母	M2.5,黄铜	
焊针	黄铜, 镀锡	
塑件	PA66, UL94V-0	
电气性能		
参考标准	UL	IEC
额定电压	600V	750V
额定电流	15A	20A
接触电阻	20mΩ	
绝缘电阻	500MΩ/DC500V	
耐电压	AC2000V/1Min	
机械性能		
温度范围	-40℃~+105℃	
瞬时温度	+250℃ 5秒	

MATERIAL		
Nut	M2.5,Brass	
Pin header	Brass, Si plated	
Housing	PA66, UL94V-0	
ELECTRICAL		
Standard	UL	IEC
Rated voltage	600V	750V
Rated current	15A	20A
Contact resistance	20mΩ	
Insulation resistance	500MΩ/DC500V	
Withstanding voltage	AC2000V/1Min	
MECHANICAL		
Temp. range	-40℃~+105℃	
Max. soldering	+250℃ for 5 Sec	

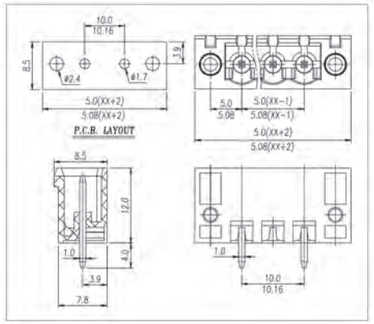

Pitch:5.0/5.08mm

MODEL:JL2EDGRM-5.0/5.08

认证/CERTIFICATION

材质及电镀		
螺母	M2.5,黄铜	
焊针	黄铜, 镀锡	
塑件	PA66, UL94V-0	
电气性能		
参考标准	UL	IEC
额定电压	300V	450V
额定电流	15A	20A
接触电阻	20mΩ	
绝缘电阻	500MΩ/DC500V	
耐电压	AC2000V/1Min	
机械性能		
温度范围	-40℃~+105℃	
瞬时温度	+250℃ 5秒	

MATERIAL		
Nut	M2.5,Brass	
Pin header	Brass, Si plated	
Housing	PA66, UL94V-0	
ELECTRICAL		
Standard	UL	IEC
Rated voltage	300V	450V
Rated current	15A	20A
Contact resistance	20mΩ	
Insulation resistance	500MΩ/DC500V	
Withstanding voltage	AC2000V/1Min	
MECHANICAL		
Temp. range	-40℃~+105℃	
Max. soldering	+250℃ for 5 Sec	

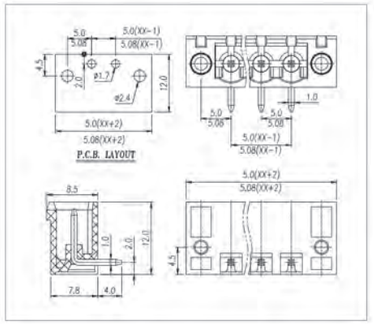

MODEL:JL2EDGRM-7.5/7.62

认证/CERTIFICATION		
材质及电镀		
螺母	M2.5,黄铜	
焊针	黄铜, 镀锡	
塑件	PA66, UL94V-0	
电气性能		
参考标准	UL	IEC
额定电压	300V	450V
额定电流	15A	20A
接触电阻	20mΩ	
绝缘电阻	500MΩ/DC500V	
耐电压	AC2000V/1Min	
机械性能		
温度范围	-40℃~+105℃	
瞬时温度	+250℃ 5秒	

MATERIAL		
Nut	M2.5,Brass	
Pin header	Brass, Si plated	
Housing	PA66, UL94V-0	
ELECTRICAL		
Standard	UL	IEC
Rated voltage	300V	450V
Rated current	15A	20A
Contact resistance	20mΩ	
Insulation resistance	500MΩ/DC500V	
Withstanding voltage	AC2000V/1Min	
MECHANICAL		
Temp. range	-40℃~+105℃	
Max. soldering	+250℃ for 5 Sec	

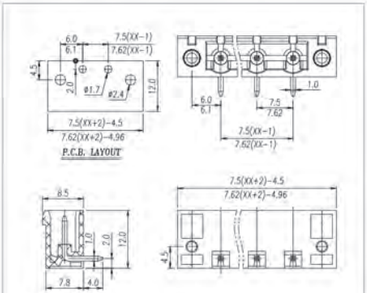

MODEL:JL2EDGRM-10.0/10.16

认证/CERTIFICATION		
材质及电镀		
螺母	M2.5,黄铜	
焊针	黄铜, 镀锡	
塑件	PA66, UL94V-0	
电气性能		
参考标准	UL	IEC
额定电压	600V	750V
额定电流	15A	20A
接触电阻	20mΩ	
绝缘电阻	500MΩ/DC500V	
耐电压	AC2000V/1Min	
机械性能		
温度范围	-40℃~+105℃	
瞬时温度	+250℃ 5秒	

MATERIAL		
Nut	M2.5,Brass	
Pin header	Brass, Si plated	
Housing	PA66, UL94V-0	
ELECTRICAL		
Standard	UL	IEC
Rated voltage	600V	750V
Rated current	15A	20A
Contact resistance	20mΩ	
Insulation resistance	500MΩ/DC500V	
Withstanding voltage	AC2000V/1Min	
MECHANICAL		
Temp. range	-40℃~+105℃	
Max. soldering	+250℃ for 5 Sec	

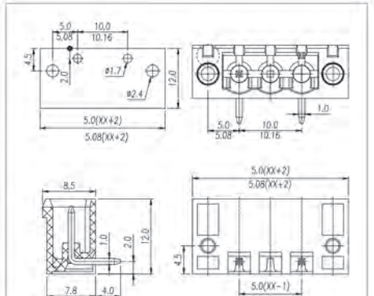

MODEL:JL2EDGLF

认证/CERTIFICATION		
材质及电镀		
焊针	黄铜, 镀锡	
塑件	PA66, UL94V-0	
电气性能		
参考标准	UL	IEC
额定电压	300V	450V
额定电流	12A	15A
接触电阻	20mΩ	
绝缘电阻	500MΩ/DC500V	
耐电压	AC2000V/1Min	
机械性能		
温度范围	-40℃~+105℃	
瞬时温度	+250℃ 5秒	

MATERIAL		
Pin header	Brass, Sn plated	
Housing	PA66, UL94V-0	
ELECTRICAL		
Standard	UL	IEC
Rated voltage	300V	450V
Rated current	12A	15A
Contact resistance	20mΩ	
Insulation resistance	500MΩ/DC500V	
Withstanding voltage	AC2000V/1Min	
MECHANICAL		
Temp. range	-40℃~+105℃	
Max. soldering	+250℃ for 5 Sec	

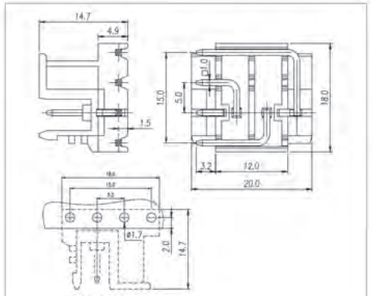

MODEL:JL2EDGRF

认证/CERTIFICATION		
材质及电镀		
焊针	黄铜, 镀锡	
塑件	PA66, UL94V-0	
电气性能		
参考标准	UL	IEC
额定电压	300V	450V
额定电流	12A	15A
接触电阻	20mΩ	
绝缘电阻	500MΩ/DC500V	
耐电压	AC2000V/1Min	
机械性能		
温度范围	-40℃~+105℃	
瞬时温度	+250℃ 5秒	

MATERIAL		
Pin header	Brass, Sn plated	
Housing	PA66, UL94V-0	
ELECTRICAL		
Standard	UL	IEC
Rated voltage	300V	450V
Rated current	12A	15A
Contact resistance	20mΩ	
Insulation resistance	500MΩ/DC500V	
Withstanding voltage	AC2000V/1Min	
MECHANICAL		
Temp. range	-40℃~+105℃	
Max. soldering	+250℃ for 5 Sec	

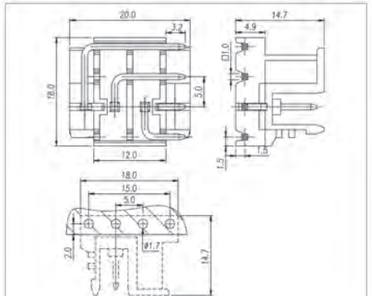

MODEL:JL2EDGVT

认证/CERTIFICATION		
材质及电镀		
焊针	黄铜, 镀锡	
塑件	PA66, UL94V-0	
电气性能		
参考标准	UL	IEC
额定电压	300V	450V
额定电流	15A	20A
接触电阻	20mΩ	
绝缘电阻	500MΩ/DC500V	
耐电压	AC2000V/1Min	
机械性能		
温度范围	-40℃~+105℃	
瞬时温度	+250℃ 5秒	

MATERIAL		
Pin header	Brass, Sn plated	
Housing	PA66, UL94V-0	
ELECTRICAL		
Standard	UL	IEC
Rated voltage	300V	450V
Rated current	15A	20A
Contact resistance	20mΩ	
Insulation resistance	500MΩ/DC500V	
Withstanding voltage	AC2000V/1Min	
MECHANICAL		
Temp. range	-40℃~+105℃	
Max. soldering	+250℃ for 5 Sec	

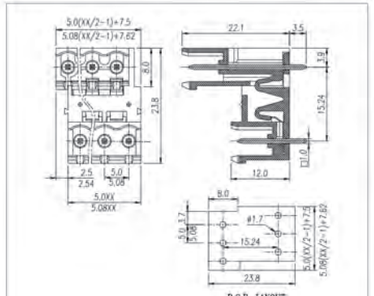

MODEL:JL2EDGVTM

认证/CERTIFICATION		
材质及电镀		
螺母	M2.5,黄铜	
焊针	黄铜, 镀锡	
塑件	PA66, UL94V-0	
电气性能		
参考标准	UL	IEC
额定电压	300V	450V
额定电流	15A	20A
接触电阻	20mΩ	
绝缘电阻	500MΩ/DC500V	
耐电压	AC2000V/1Min	
机械性能		
温度范围	-40℃~+105℃	
瞬时温度	+250℃ 5秒	

MATERIAL		
Nut	M2.5,Brass	
Pin header	Brass, Si plated	
Housing	PA66, UL94V-0	
ELECTRICAL		
Standard	UL	IEC
Rated voltage	300V	450V
Rated current	15A	20A
Contact resistance	20mΩ	
Insulation resistance	500MΩ/DC500V	
Withstanding voltage	AC2000V/1Min	
MECHANICAL		
Temp. range	-40℃~+105℃	
Max. soldering	+250℃ for 5 Sec	

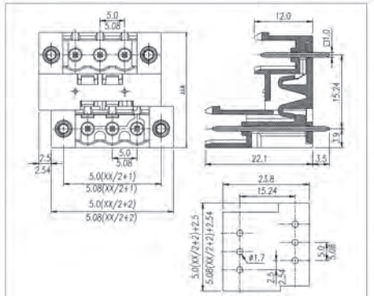

MODEL:JL2EDGRT

认证/CERTIFICATION	
材质及电镀	
焊针	黄铜, 镀锡
塑件	PA66, UL94V-0
电气性能	
参考标准	UL / IEC
额定电压	300V / 450V
额定电流	15A / 20A
接触电阻	20mΩ
绝缘电阻	500MΩ/DC500V
耐电压	AC2000V/1Min
机械性能	
温度范围	-40℃~+105℃
瞬时温度	+250℃ 5秒

MATERIAL	
Pin header	Brass, Sn plated
Housing	PA66, UL94V-0
ELECTRICAL	
Standard	UL / IEC
Rated voltage	300V / 450V
Rated current	15A / 20A
Contact resistance	20mΩ
Insulation resistance	500MΩ/DC500V
Withstanding voltage	AC2000V/1Min
MECHANICAL	
Temp. range	-40℃~+105℃
Max. soldering	+250℃ for 5 Sec

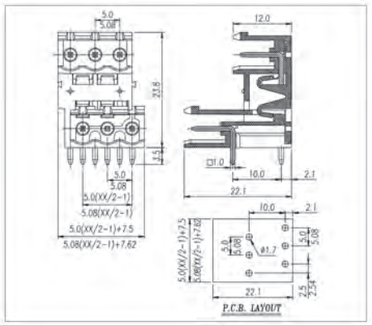

MODEL:JL2EDGVTM

认证/CERTIFICATION	
材质及电镀	
螺母	M2.5,黄铜
焊针	黄铜, 镀锡
塑件	PA66, UL94V-0
电气性能	
参考标准	UL / IEC
额定电压	300V / 450V
额定电流	15A / 20A
接触电阻	20mΩ
绝缘电阻	500MΩ/DC500V
耐电压	AC2000V/1Min
机械性能	
温度范围	-40℃~+105℃
瞬时温度	+250℃ 5秒

MATERIAL	
Nut	M2.5,Brass
Pin header	Brass, Si plated
Housing	PA66, UL94V-0
ELECTRICAL	
Standard	UL / IEC
Rated voltage	300V / 450V
Rated current	15A / 20A
Contact resistance	20mΩ
Insulation resistance	500MΩ/DC500V
Withstanding voltage	AC2000V/1Min
MECHANICAL	
Temp. range	-40℃~+105℃
Max. soldering	+250℃ for 5 Sec

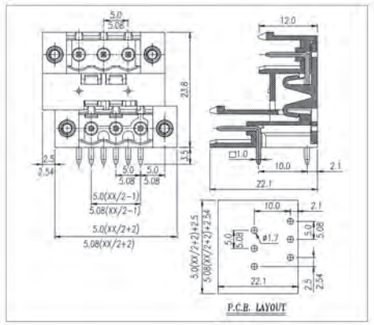

MODEL:JL2EDGVTC

认证/CERTIFICATION	
材质及电镀	
焊针	黄铜, 镀锡
塑件	PA66, UL94V-0
电气性能	
参考标准	UL / IEC
额定电压	300V / 450V
额定电流	15A / 20A
接触电阻	20mΩ
绝缘电阻	500MΩ/DC500V
耐电压	AC2000V/1Min
机械性能	
温度范围	-40℃~+105℃
瞬时温度	+250℃ 5秒

MATERIAL	
Pin header	Brass, Sn plated
Housing	PA66, UL94V-0
ELECTRICAL	
Standard	UL / IEC
Rated voltage	300V / 450V
Rated current	15A / 20A
Contact resistance	20mΩ
Insulation resistance	500MΩ/DC500V
Withstanding voltage	AC2000V/1Min
MECHANICAL	
Temp. range	-40℃~+105℃
Max. soldering	+250℃ for 5 Sec

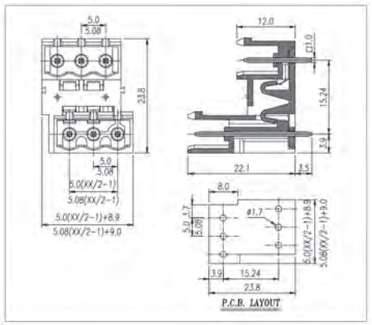

MODEL:JL2EDGRTC

认证/CERTIFICATION	
材质及电镀	
焊针	黄铜, 镀锡
塑件	PA66, UL94V-0
电气性能	
参考标准	UL / IEC
额定电压	300V / 450V
额定电流	15A / 20A
接触电阻	20mΩ
绝缘电阻	500MΩ/DC500V
耐电压	AC2000V/1Min
机械性能	
温度范围	-40℃~+105℃
瞬时温度	+250℃ 5秒

MATERIAL	
Pin header	Brass, Sn plated
Housing	PA66, UL94V-0
ELECTRICAL	
Standard	UL / IEC
Rated voltage	300V / 450V
Rated current	15A / 20A
Contact resistance	20mΩ
Insulation resistance	500MΩ/DC500V
Withstanding voltage	AC2000V/1Min
MECHANICAL	
Temp. range	-40℃~+105℃
Max. soldering	+250℃ for 5 Sec

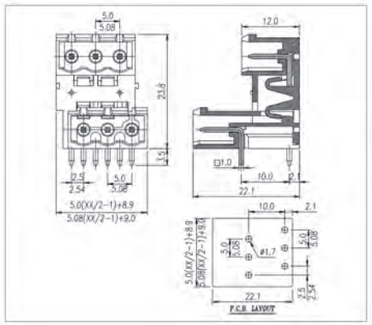

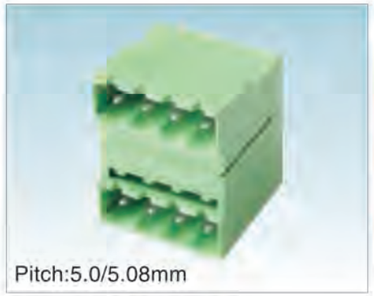

MODEL:JL2EDGVH

认证/CERTIFICATION	
材质及电镀	
焊针	黄铜, 镀锡
塑件	PA66, UL94V-0
电气性能	
参考标准	UL / IEC
额定电压	300V / 450V
额定电流	15A / 20A
接触电阻	20mΩ
绝缘电阻	500MΩ/DC500V
耐电压	AC2000V/1Min
机械性能	
温度范围	-40℃~+105℃
瞬时温度	+250℃ 5秒

MATERIAL	
Pin header	Brass, Sn plated
Housing	PA66, UL94V-0
ELECTRICAL	
Standard	UL / IEC
Rated voltage	300V / 450V
Rated current	15A / 20A
Contact resistance	20mΩ
Insulation resistance	500MΩ/DC500V
Withstanding voltage	AC2000V/1Min
MECHANICAL	
Temp. range	-40℃~+105℃
Max. soldering	+250℃ for 5 Sec

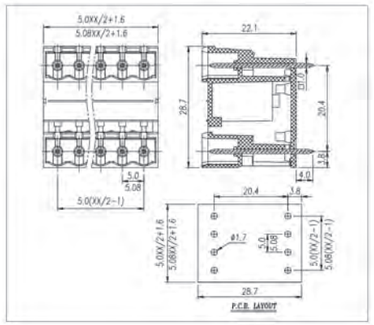

MODEL:JL2EDGVHM

认证/CERTIFICATION	
材质及电镀	
螺母	M2.5,黄铜
焊针	黄铜, 镀锡
塑件	PA66, UL94V-0
电气性能	
参考标准	UL / IEC
额定电压	300V / 450V
额定电流	15A / 20A
接触电阻	20mΩ
绝缘电阻	500MΩ/DC500V
耐电压	AC2000V/1Min
机械性能	
温度范围	-40℃~+105℃
瞬时温度	+250℃ 5秒

MATERIAL	
Nut	M2.5,Brass
Pin header	Brass, Si plated
Housing	PA66, UL94V-0
ELECTRICAL	
Standard	UL / IEC
Rated voltage	300V / 450V
Rated current	15A / 20A
Contact resistance	20mΩ
Insulation resistance	500MΩ/DC500V
Withstanding voltage	AC2000V/1Min
MECHANICAL	
Temp. range	-40℃~+105℃
Max. soldering	+250℃ for 5 Sec

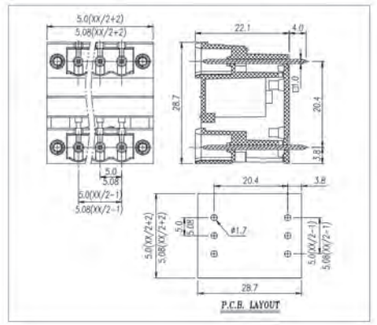

Pitch:5.0/5.08mm

MODEL:JL2EDGRH

认证/CERTIFICATION

材质及电镀		
焊针	黄铜, 镀锡	
塑件	PA66, UL94V-0	
电气性能		
参考标准	UL	IEC
额定电压	300V	450V
额定电流	15A	20A
接触电阻	20mΩ	
绝缘电阻	500MΩ/DC500V	
耐电压	AC2000V/1Min	
机械性能		
温度范围	-40℃~+105℃	
瞬时温度	+250℃ 5秒	

MATERIAL		
Pin header	Brass, Sn plated	
Housing	PA66, UL94V-0	
ELECTRICAL		
Standard	UL	IEC
Rated voltage	300V	450V
Rated current	15A	20A
Contact resistance	20mΩ	
Insulation resistance	500MΩ/DC500V	
Withstanding voltage	AC2000V/1Min	
MECHANICAL		
Temp. range	-40℃~+105℃	
Max. soldering	+250℃ for 5 Sec	

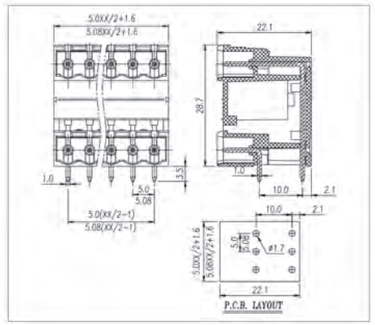

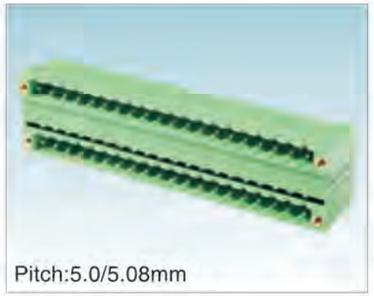
Pitch:5.0/5.08mm

MODEL:JL2EDGRHM

认证/CERTIFICATION

材质及电镀		
螺母	M2.5,黄铜	
焊针	黄铜, 镀锡	
塑件	PA66, UL94V-0	
电气性能		
参考标准	UL	IEC
额定电压	300V	450V
额定电流	15A	20A
接触电阻	20mΩ	
绝缘电阻	500MΩ/DC500V	
耐电压	AC2000V/1Min	
机械性能		
温度范围	-40℃~+105℃	
瞬时温度	+250℃ 5秒	

MATERIAL		
Nut	M2.5,Brass	
Pin header	Brass, Si plated	
Housing	PA66, UL94V-0	
ELECTRICAL		
Standard	UL	IEC
Rated voltage	300V	450V
Rated current	15A	20A
Contact resistance	20mΩ	
Insulation resistance	500MΩ/DC500V	
Withstanding voltage	AC2000V/1Min	
MECHANICAL		
Temp. range	-40℃~+105℃	
Max. soldering	+250℃ for 5 Sec	

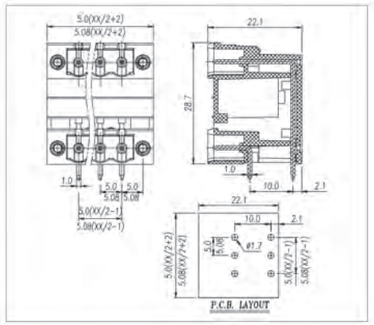

Pitch:5.0/5.08mm

MODEL:JL2EDGL

认证/CERTIFICATION

材质及电镀		
焊针	黄铜, 镀锡	
塑件	PA66, UL94V-0	
电气性能		
参考标准	UL	IEC
额定电压	300V	450V
额定电流	15A	20A
接触电阻	20mΩ	
绝缘电阻	500MΩ/DC500V	
耐电压	AC2000V/1Min	
机械性能		
温度范围	-40℃~+105℃	
瞬时温度	+250℃ 5秒	

MATERIAL		
Pin header	Brass, Sn plated	
Housing	PA66, UL94V-0	
ELECTRICAL		
Standard	UL	IEC
Rated voltage	300V	450V
Rated current	15A	20A
Contact resistance	20mΩ	
Insulation resistance	500MΩ/DC500V	
Withstanding voltage	AC2000V/1Min	
MECHANICAL		
Temp. range	-40℃~+105℃	
Max. soldering	+250℃ for 5 Sec	

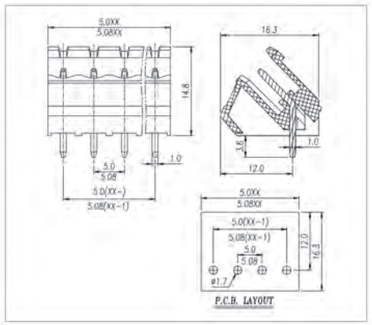

Pitch:5.0/5.08mm

MODEL:JL2EDGLC

认证/CERTIFICATION

材质及电镀		
焊针	黄铜, 镀锡	
塑件	PA66, UL94V-0	
电气性能		
参考标准	UL	IEC
额定电压	300V	450V
额定电流	15A	20A
接触电阻	20mΩ	
绝缘电阻	500MΩ/DC500V	
耐电压	AC2000V/1Min	
机械性能		
温度范围	-40℃~+105℃	
瞬时温度	+250℃ 5秒	

MATERIAL		
Pin header	Brass, Sn plated	
Housing	PA66, UL94V-0	
ELECTRICAL		
Standard	UL	IEC
Rated voltage	300V	450V
Rated current	15A	20A
Contact resistance	20mΩ	
Insulation resistance	500MΩ/DC500V	
Withstanding voltage	AC2000V/1Min	
MECHANICAL		
Temp. range	-40℃~+105℃	
Max. soldering	+250℃ for 5 Sec	

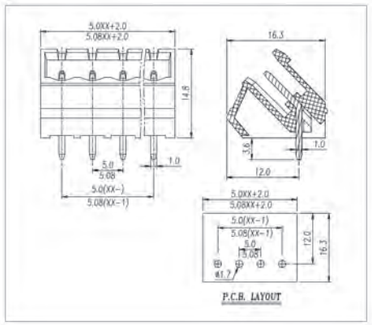

Pitch:5.0/5.08mm

MODEL:JL2EDGLM

认证/CERTIFICATION

材质及电镀		
螺母	M2.5,黄铜	
焊针	黄铜, 镀锡	
塑件	PA66, UL94V-0	
电气性能		
参考标准	UL	IEC
额定电压	300V	450V
额定电流	15A	20A
接触电阻	20mΩ	
绝缘电阻	500MΩ/DC500V	
耐电压	AC2000V/1Min	
机械性能		
温度范围	-40℃~+105℃	
瞬时温度	+250℃ 5秒	

MATERIAL		
Nut	M2.5,Brass	
Pin header	Brass, Si plated	
Housing	PA66, UL94V-0	
ELECTRICAL		
Standard	UL	IEC
Rated voltage	300V	450V
Rated current	15A	20A
Contact resistance	20mΩ	
Insulation resistance	500MΩ/DC500V	
Withstanding voltage	AC2000V/1Min	
MECHANICAL		
Temp. range	-40℃~+105℃	
Max. soldering	+250℃ for 5 Sec	

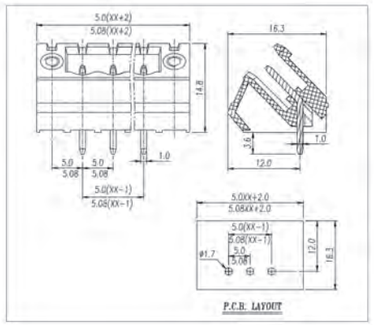

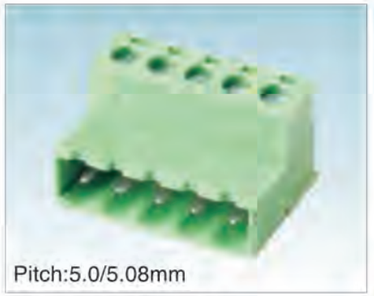
Pitch:5.0/5.08mm

MODEL:JL2EDGKR

认证/CERTIFICATION

材质及电镀		
螺丝	M3.0, 钢, 镀锌	
方针	黄铜, 镀锡	
方块	黄铜, 镀镍	
塑件	PA66, UL94V-0	
电气性能		
参考标准	UL	IEC
额定电压	300V	450V
额定电流	15A	20A
使用线径	28~14AWG	2.5mm²
接触电阻	20mΩ	
绝缘电阻	500MΩ/DC500V	
耐电压	AC2000V/1Min	
机械性能		
温度范围	-40℃~+105℃	
瞬时温度	+250℃ 5秒	
扭矩	5.10kgf-cm/0.5Nm/4.43Lbin	
剥线长度	7~8mm	

MATERIAL		
Screws	M3.0 Steel Zn plated	
Pin header	Brass, Sn plated	
Cage	Brass, Ni plated	
Housing	PA66, UL94V-0	
ELECTRICAL		
Standard	UL	IEC
Rated voltage	300V	450V
Rated current	15A	20A
Wire range	28~14AWG	2.5mm²
Contact resistance	20mΩ	
Insulation resistance	500MΩ/DC500V	
Withstanding voltage	AC2000V/1Min	
MECHANICAL		
Temp. range	-40℃~+105℃	
Max. soldering	+250℃ for 5 Sec	
Torque	5.10kgf-cm/0.5Nm/4.43Lbin	
Strip length	7~8mm	

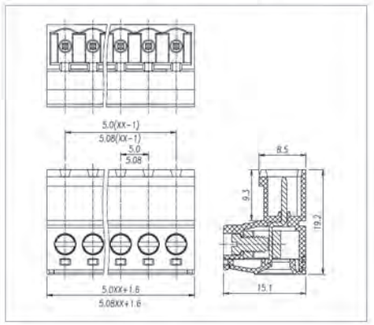

Pitch:5.0/5.08mm

MODEL:JL2EDGRM

认证/CERTIFICATION	
材质及电镀	
螺丝	M3.0, 钢, 镀锌
方针	黄铜, 镀锡
方块	黄铜, 镀镍
塑件	PA66, UL94V-0
电气性能	
参考标准	UL / IEC
额定电压	300V / 450V
额定电流	15A / 20A
使用线径	28~14AWG / 2.5mm²
接触电阻	20mΩ
绝缘电阻	500MΩ/DC500V
耐电压	AC2000V/1Min
机械性能	
温度范围	-40℃~+105℃
瞬时温度	+250℃ 5秒
扭矩	5.10kgf-cm/0.5Nm/4.43Lbin
剥线长度	7-8mm

MATERIAL	
Screws	M3.0 Steel Zn plated
Pin header	Brass, Sn plated
Cage	Brass, Ni plated
Housing	PA66, UL94V-0
ELECTRICAL	
Standard	UL / IEC
Rated voltage	300V / 450V
Rated current	15A / 20A
Wire range	28~14AWG / 2.5mm²
Contact resistance	20mΩ
Insulation resistance	500MΩ/DC500V
Withstanding voltage	AC2000V/1Min
MECHANICAL	
Temp. range	-40℃~+105℃
Max. soldering	+250℃ for 5 Sec
Torque	5.10kgf-cm/0.5Nm/4.43Lbin
Strip length	7~8mm

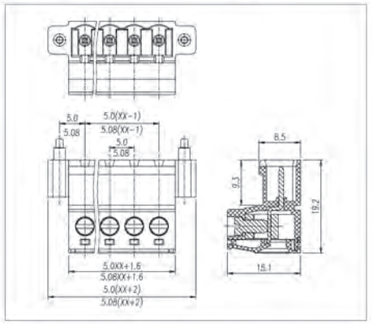

Pitch:5.0/5.08mm

MODEL:JL2EDGKRN

认证/CERTIFICATION	
材质及电镀	
螺丝	M3.0, 钢, 镀锌
螺母	M2.5,黄铜
方针	黄铜, 镀锡
方块	黄铜, 镀镍
塑件	PA66, UL94V-0
电气性能	
参考标准	UL / IEC
额定电压	300V / 450V
额定电流	15A / 20A
使用线径	28~14AWG / 2.5mm²
接触电阻	20mΩ
绝缘电阻	500MΩ/DC500V
耐电压	AC2000V/1Min
机械性能	
温度范围	-40℃~+105℃
瞬时温度	+250℃ 5秒
扭矩	5.10kgf-cm/0.5Nm/4.43Lbin
剥线长度	7-8mm

MATERIAL	
Screws	M4.0 Steel Zn plated
Nut	M2.5,Brass
Pin header	Brass, Sn plated
Cage	Brass, Ni plated
Housing	PA66, UL94V-0
ELECTRICAL	
Standard	UL / IEC
Rated voltage	300V / 450V
Rated current	15A / 20A
Wire range	28~14AWG / 2.5mm²
Contact resistance	20mΩ
Insulation resistance	500MΩ/DC500V
Withstanding voltage	AC2000V/1Min
MECHANICAL	
Temp. range	-40℃~+105℃
Max. soldering	+250℃ for 5 Sec
Torque	5.10kgf-cm/0.5Nm/4.43Lbin
Strip length	7~8mm

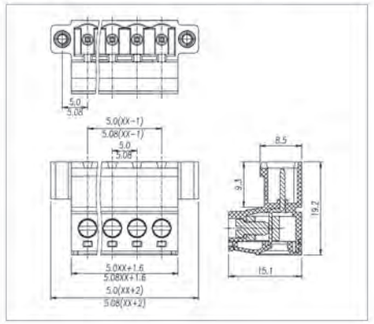

Pitch:5.0mm

MODEL:JL2EDGKP-5.0

认证/CERTIFICATION	
材质及电镀	
螺丝	M3.0, 钢, 镀锌
夹片	磷青铜, 镀镍
方块	黄铜, 镀镍
塑件	PA66, UL94V-0
电气性能	
参考标准	UL / IEC
额定电压	300V / 450V
额定电流	10A / 20A
使用线径	28~14AWG / 2.5mm²
接触电阻	20mΩ
绝缘电阻	500MΩ/DC500V
耐电压	AC2000V/1Min
机械性能	
温度范围	-40℃~+105℃
瞬时温度	+250℃ 5秒
扭矩	5.10kgf-cm/0.5Nm/4.43Lbin
剥线长度	7-8mm

MATERIAL	
Screws	M3.0 Steel Zn plated
Clamp	Phosphor bronze, Ni plated
Cage	Brass, Ni plated
Housing	PA66, UL94V-0
ELECTRICAL	
Standard	UL / IEC
Rated voltage	300V / 450V
Rated current	10A / 20A
Wire range	28~14AWG / 2.5mm²
Contact resistance	20mΩ
Insulation resistance	500MΩ/DC500V
Withstanding voltage	AC2000V/1Min
MECHANICAL	
Temp. range	-40℃~+105℃
Max. soldering	+250℃ for 5 Sec
Torque	5.10kgf-cm/0.5Nm/4.43Lbin
Strip length	7~8mm

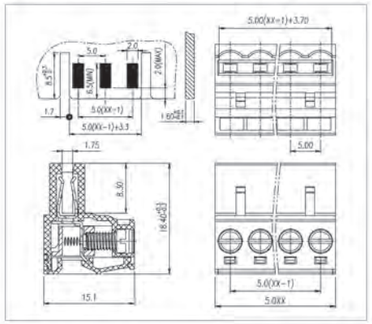

Pitch:5.0/5.08mm

MODEL:JL2CDGM

认证/CERTIFICATION	
材质及电镀	
螺母	M2.5,黄铜
焊针	黄铜, 镀锡
塑件	PA66, UL94V-0
电气性能	
参考标准	UL / IEC
额定电压	300V / 450V
额定电流	15A / 20A
接触电阻	20mΩ
绝缘电阻	500MΩ/DC500V
耐电压	AC2000V/1Min
机械性能	
温度范围	-40℃~+105℃
瞬时温度	+250℃ 5秒

MATERIAL	
Nut	M2.5,Brass
Pin header	Brass, Si plated
Housing	PA66, UL94V-0
ELECTRICAL	
Standard	UL / IEC
Rated voltage	300V / 450V
Rated current	15A / 20A
Contact resistance	20mΩ
Insulation resistance	500MΩ/DC500V
Withstanding voltage	AC2000V/1Min
MECHANICAL	
Temp. range	-40℃~+105℃
Max. soldering	+250℃ for 5 Sec

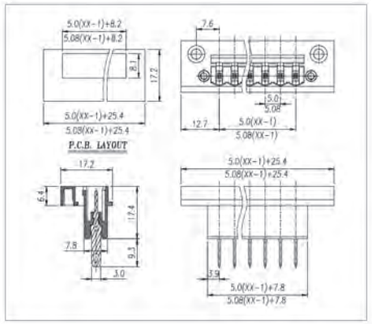

Pitch:3.96mm

MODEL:HT396K

认证/CERTIFICATION	
材质及电镀	
螺丝	M2.0, 钢, 镀锌
夹片	黄铜, 镀镍
弹片	黄铜, 镀镍
塑件	PA66, UL94V-0
电气性能	
参考标准	UL / IEC
额定电压	300V / 250V
额定电流	8A / 15A
使用线径	26~16AWG / 1.5mm²
接触电阻	20mΩ
绝缘电阻	500MΩ/DC500V
耐电压	AC2000V/1Min
机械性能	
温度范围	-40℃~+105℃
瞬时温度	+250℃ 5秒
扭矩	2.04kgf-cm/0.2Nm/1.77Lbin
剥线长度	6~7mm

MATERIAL	
Screws	M2.0 Steel Zn plated
Clamp	Brass, Ni plated
Shrapnel	Brass, Ni plated
Housing	PA66, UL94V-0
ELECTRICAL	
Standard	UL / IEC
Rated voltage	300V / 250V
Rated current	8A / 15A
Wire range	26~16AWG / 1.5mm²
Contact resistance	20mΩ
Insulation resistance	500MΩ/DC500V
Withstanding voltage	AC2000V/1Min
MECHANICAL	
Temp. range	-40℃~+105℃
Max. soldering	+250℃ for 5 Sec
Torque	2.04kgf-cm/0.2Nm/1.77Lbin
Strip length	6~7mm

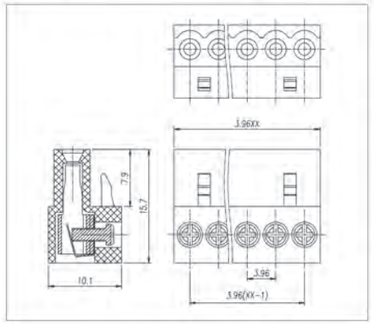

Pitch:3.96mm

MODEL:HT396V

认证/CERTIFICATION	
材质及电镀	
焊针	黄铜, 镀锡
塑件	PA66, UL94V-0
电气性能	
参考标准	UL / IEC
额定电压	300V / 250V
额定电流	8A / 15A
接触电阻	20mΩ
绝缘电阻	500MΩ/DC500V
耐电压	AC2000V/1Min
机械性能	
温度范围	-40℃~+105℃
瞬时温度	+250℃ 5秒

MATERIAL	
Pin header	Brass, Sn plated
Housing	PA66, UL94V-0
ELECTRICAL	
Standard	UL / IEC
Rated voltage	300V / 250V
Rated current	8A / 15A
Contact resistance	20mΩ
Insulation resistance	500MΩ/DC500V
Withstanding voltage	AC2000V/1Min
MECHANICAL	
Temp. range	-40℃~+105℃
Max. soldering	+250℃ for 5 Sec

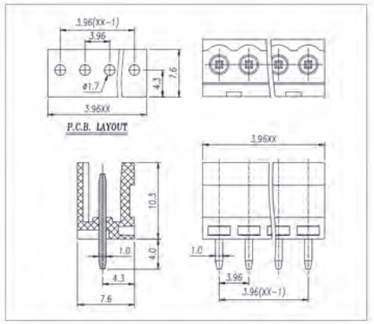

MODEL:HT396R

认证/CERTIFICATION

材质及电镀		
焊针	黄铜, 镀锡	
塑件	PA66, UL94V-0	
电气性能		
参考标准	UL	IEC
额定电压	300V	250V
额定电流	8A	15A
接触电阻	20mΩ	
绝缘电阻	500MΩ/DC500V	
耐电压	AC2000V/1Min	
机械性能		
温度范围	-40℃~+105℃	
瞬时温度	+250℃ 5秒	

MATERIAL		
Pin header	Brass, Sn plated	
Housing	PA66, UL94V-0	
ELECTRICAL		
Standard	UL	IEC
Rated voltage	300V	250V
Rated current	8A	15A
Contact resistance	20mΩ	
Insulation resistance	500MΩ/DC500V	
Withstanding voltage	AC2000V/1Min	
MECHANICAL		
Temp. range	-40℃~+105℃	
Max. soldering	+250℃ for 5 Sec	

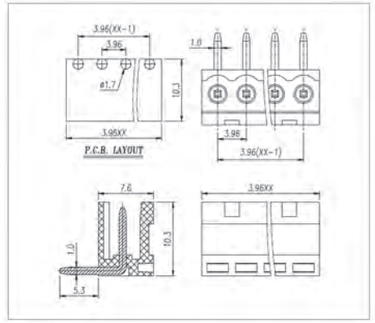

MODEL:HT508K

认证/CERTIFICATION

材质及电镀		
螺丝	M2.5, 钢, 镀锌	
夹片	黄铜, 镀镍	
弹片	黄铜, 镀镍	
塑件	PA66, UL94V-0	
电气性能		
参考标准	UL	IEC
额定电压	300V	450V
额定电流	10A	15A
使用线径	22~14AWG	2.5mm²
接触电阻	20mΩ	
绝缘电阻	500MΩ/DC500V	
耐电压	AC2000V/1Min	
机械性能		
温度范围	-40℃~+105℃	
瞬时温度	+250℃ 5秒	
扭矩	4.08kgf-cm/0.4Nm/3.54Lbin	
剥线长度	6-7mm	

MATERIAL		
Screws	M2.5 Steel Zn plated	
Clamp	Brass, Ni plated	
Shrapnel	Brass, Ni plated	
Housing	PA66, UL94V-0	
ELECTRICAL		
Standard	UL	IEC
Rated voltage	300V	450V
Rated current	10A	15A
Wire range	22~14AWG	2.5mm²
Contact resistance	20mΩ	
Insulation resistance	500MΩ/DC500V	
Withstanding voltage	AC2000V/1Min	
MECHANICAL		
Temp. range	-40℃~+105℃	
Max. soldering	+250℃ for 5 Sec	
Torque	4.08kgf-cm/0.4Nm/3.54Lbin	
Strip length	6~7mm	

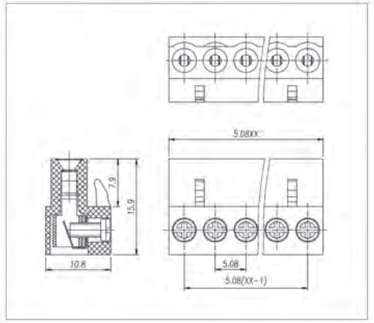

MODEL:HT508V

认证/CERTIFICATION

材质及电镀		
焊针	黄铜, 镀锡	
塑件	PA66, UL94V-0	
电气性能		
参考标准	UL	IEC
额定电压	300V	450V
额定电流	10A	15A
接触电阻	20mΩ	
绝缘电阻	500MΩ/DC500V	
耐电压	AC2000V/1Min	
机械性能		
温度范围	-40℃~+105℃	
瞬时温度	+250℃ 5秒	

MATERIAL		
Pin header	Brass, Sn plated	
Housing	PA66, UL94V-0	
ELECTRICAL		
Standard	UL	IEC
Rated voltage	300V	250V
Rated current	10A	15A
Contact resistance	20mΩ	
Insulation resistance	500MΩ/DC500V	
Withstanding voltage	AC2000V/1Min	
MECHANICAL		
Temp. range	-40℃~+105℃	
Max. soldering	+250℃ for 5 Sec	

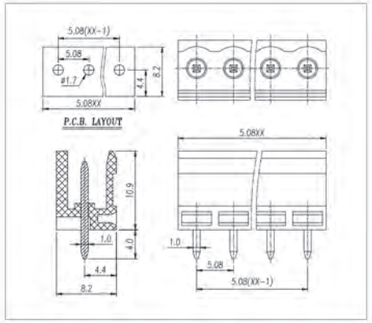

MODEL:HT508R

认证/CERTIFICATION

材质及电镀		
焊针	黄铜, 镀锡	
塑件	PA66, UL94V-0	
电气性能		
参考标准	UL	IEC
额定电压	300V	450V
额定电流	10A	15A
接触电阻	20mΩ	
绝缘电阻	500MΩ/DC500V	
耐电压	AC2000V/1Min	
机械性能		
温度范围	-40℃~+105℃	
瞬时温度	+250℃ 5秒	

MATERIAL		
Pin header	Brass, Sn plated	
Housing	PA66, UL94V-0	
ELECTRICAL		
Standard	UL	IEC
Rated voltage	300V	250V
Rated current	10A	15A
Contact resistance	20mΩ	
Insulation resistance	500MΩ/DC500V	
Withstanding voltage	AC2000V/1Min	
MECHANICAL		
Temp. range	-40℃~+105℃	
Max. soldering	+250℃ for 5 Sec	

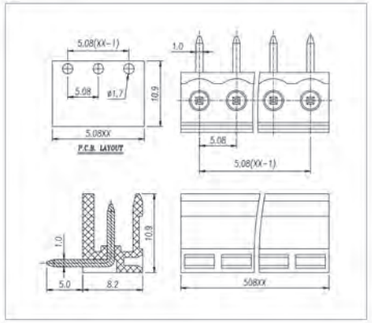

MODEL:JT800X-2P

塑 料: PA66-V0
螺 丝: 钢, 镀锌
触 点: 黄铜, 镀镍
温 度: -30℃～+105℃
电 压: 250V
电 流: 16A
线 径: 24-12AWG 2.5mm

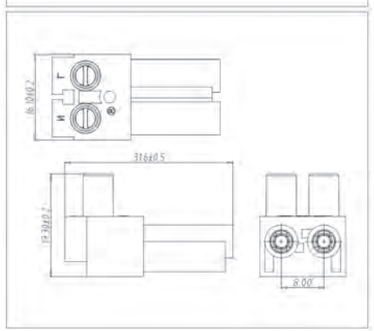

MODEL:JT800K-2P

塑 料: PA66-V0
螺 丝: 钢, 镀锌
触 点: 黄铜, 镀镍
温 度: -30℃～+105℃
电 压: 250V
电 流: 16A
线 径: 24-12AWG 2.5mm

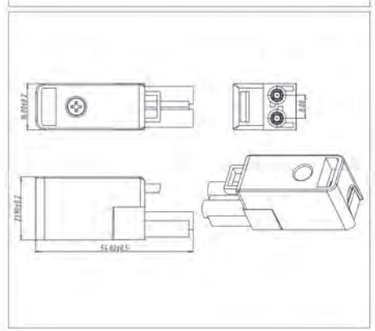

MODEL:JL2TG-5.0/5.08

MODEL:JL2TM-5.0/5.08

MODEL:JL2TGM-5.0/5.08

MODEL:JL2TMM-5.0/5.08

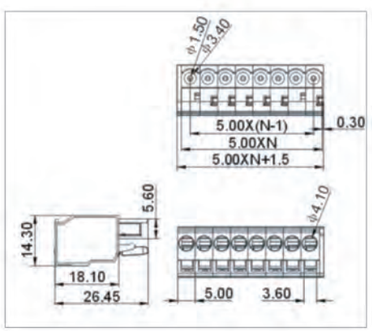

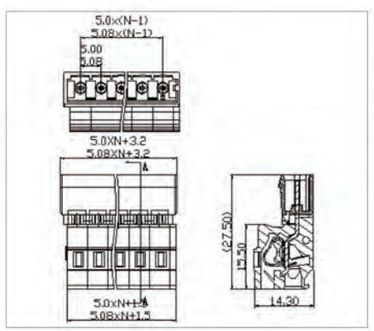

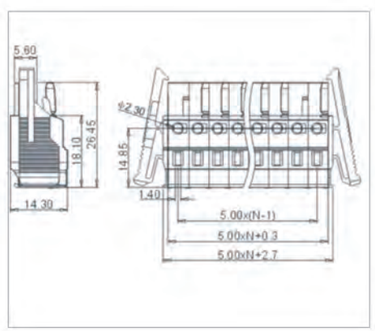

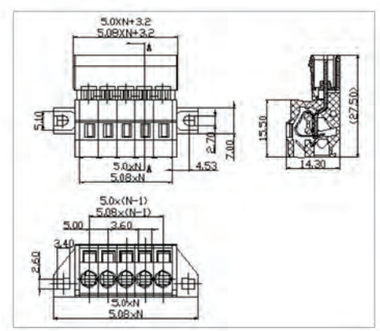

JL15GRC-2.5

WJ15ED GRH-2.5

JL2EDGK-□.□□□.□□

JL15EDGBM-5. 081

GKDM-3.5/3.81

WJ15EDGA-3.81

WJ15EDGB-3.81

WJ15EDGAM- 3.81

WJ15EDGBM-3.81

WJ2EDGK-5.0/5.08

WJ2EDGK-7.50/7.

插拔式产品互配选型参考表 Plug-in Type Product Matched Reference Table

PCB Headers / Plugs	JL15ED GVC-2.5	WJ15EDGV HB-THT-3.50	WJ15EDGV HBM-THT-3.50	WJ15EDGV HBN-THT-3.50	WJ15ED GKR-3.81	WJ15ED GKRM-3.81	WJ15ED GKRN-3.81	WJ15ED GVC-3.5/3.81	WJ15ED GVM-3.5/3.81	WJ15CD GV-3.81	WJ15ED GVT-3.5/3.81	WJ15EDG VTM-3.5/3.81	WJ15ED GVH-3.5/3.81	WJ15EDG VHM-3.5/3.81	WJ2ED GV-5.0/5.08	WJ2ED GV-7.5/7.62	WJ2EDGV -10.0/10.16	WJ2ED GVM-5.0/5.08	WJ2ED GVM-7.50/7.62	WJ2EDG VM-10.0/10.16	WJ2ED GVT-5.0/5.08	WJ2EDG VTM-5.0/5.08	WJ2ED GL-5.0/5.08	WJ2EDG LCM-5.0/5.08	WJ2ED GKR-5.0/5.08	WJ2ED GKRM-5.0/5.08	WJ2ED GKRN-5.0/5.08	WJ2CD GM-5.0/5.08	HT396V-3.96	HT508V-3.96
	JL15ED GRC-2.5	WJ15EDGR HB-THT-3.50	WJ15EDGR HBM-THT-3.50	WJ15EDGR HBN-THT-3.50				WJ15ED GRC-3.5/3.81	WJ15ED GRM-3.5/3.81		WJ15ED GRT-3.5/3.81	WJ15EDG RTM-3.5/3.81	WJ15ED GRH-3.5/3.81	WJ15EDG RHM-3.5/3.81	WJ2ED GR-5.0/5.08	WJ2ED GR-7.50/7.62	WJ2EDGR -10.0/10.16	WJ2ED GRM-5.0/5.08	WJ2ED GRM-7.50/7.62	WJ2EDG RM-10.0/10.16	WJ2ED GRT-5.0/5.08	WJ2EDG VRTM-5.0/5.08	WJ2ED GLC-5.0/5.08						HT396R-3.96	HT508R-3.96
	JL15ED GVH-2.5														WJ2ED GVC-5.0/5.08	WJ2ED GVC-7.50/7.62	WJ2EDGVC -10.0/10.16				WJ2EDG VTC-5.0/5.08	WJ2EDG VHM-5.0/5.08								
	JL15ED GRH-2.5														WJ2ED GRC-5.0/5.08	WJ2ED GRC-7.50/7.62	WJ2EDGRC -10.0/10.16				WJ2EDG RTC-5.0/5.08	WJ2EDG RHM-5.0/5.08								
																					WJ2EDG VH-5.0/5.08									
JL15EDGKD-2.50	●																													
JL15EDGKN-3.50		●																												
JL15EDGKNG-3.50			●																											
JL15EDGKNG-3.50				●																										
JL15EDGK-3.5/3.81					●			●			●		●																	
JL15EDGKM-3.5/3.81							●		●	●		●		●																
JL15EDGKA-3.5/3.81					●			●			●		●																	
JL15EDGKAM-3.5/3.81							●		●	●		●		●																
JL15EDGKB-3.5/3.81					●			●			●		●																	
JL15EDGKBM-3.5/3.81							●		●	●		●		●																
JL15EDGKC-3.5/3.81					●			●			●		●																	
JL15EDGKCM-3.5/3.81							●		●	●		●		●																
JL15EDGKD-3.5/3.81					●			●			●		●																	
JL15EDGKDM-3.5/3.81							●		●	●		●		●																
JL15EDGA-3.81					●																									
JL15EDGAM-3.81					●																									
JL15EDGBM-3.81						●				●																				
						●				●																				
															●						●		●		●					
62																●														
WJ2EDGK-10.0/10.16																	●													
WJ2EDGKM-5.0/5.08																		●				●		●			●	●		
WJ2EDGKM-7.50/7.62																			●											
WJ2EDGKM-10.0/10.16																				●										
WJ2EDGKA-5.0/5.08															●						●		●		●					
WJ2EDGKA-7.50/7.62																●														
WJ2EDGKAM-5.0/5.08																		●				●		●			●	●		
WJ2EDGKAM-7.50/7.62																		●												
WJ2EDGKB-5.0/5.08															●						●		●		●					
WJ2EDGKB-7.50/7.62																●														
WJ2EDGKBM-5.0/5.08																		●				●		●			●	●		
WJ2EDGKBM-7.50/7.62																			●											
WJ2EDGKC-5.0/5.08															●						●		●		●					
WJ2EDGKCM-5.0/5.08																		●				●		●			●	●		
WJ2EDGKD-5.08															●						●		●		●					
WJ2EDGKDM-5.08																		●				●		●			●	●		
WJ2EDGKF-5.0															●						●		●		●					
WJ2EDGKZ-5.0/5.08															●						●		●		●					
WJ2EDGKL-5.0/5.08															●						●		●		●					
WJ2EDGKLM-5.0/5.08																		●				●		●			●	●		
WJ2EDGA-5.08															●										●					
WJ2EDGAM-5.08																		●								●				
WJ2EDGB-5.08															●										●					
WJ2EDGBM-5.08																		●								●				
HT396K-3.96																													●	
HT508K-5.08																														●

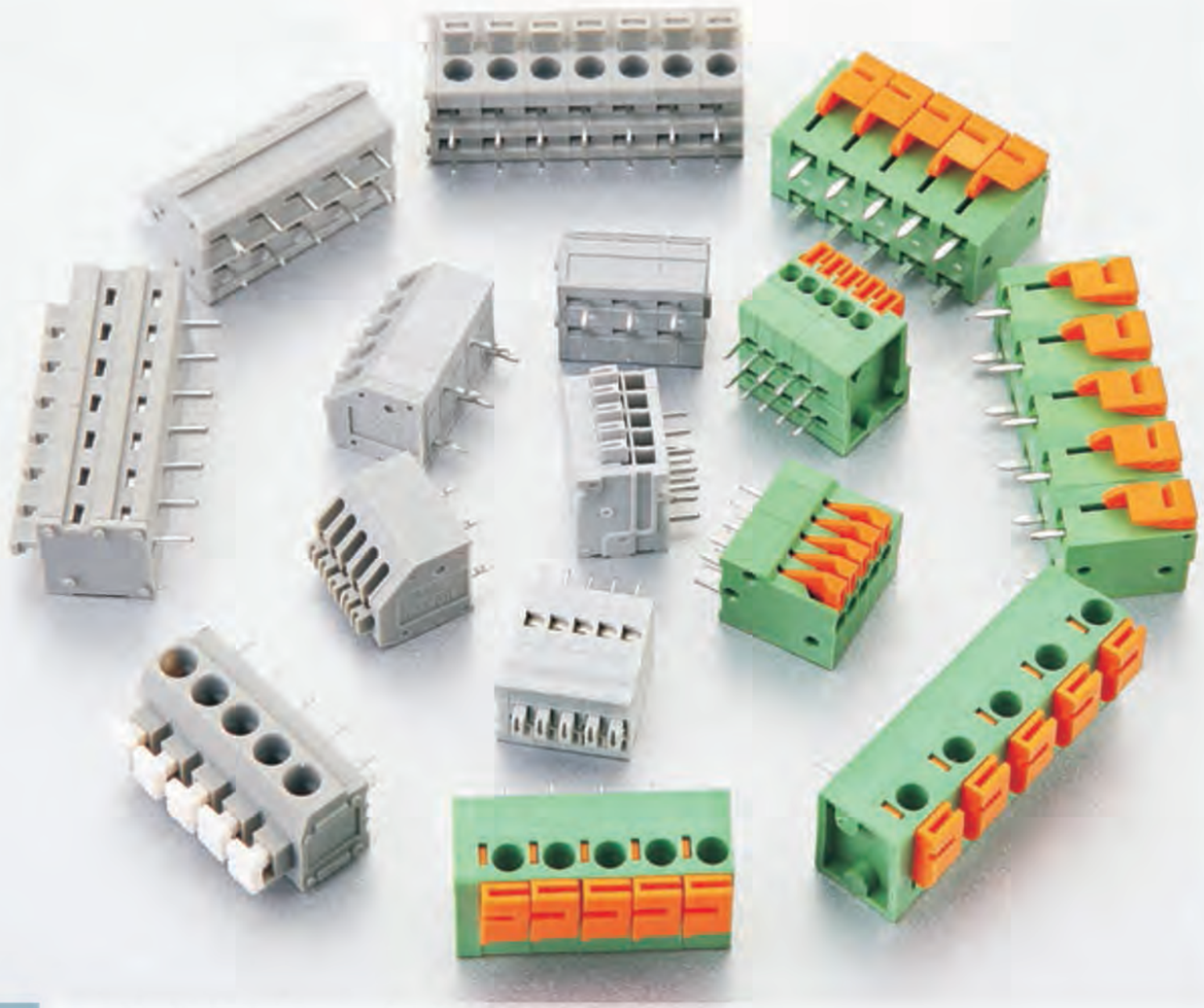

弹簧式PCB接线端子
PCB SPRING TERMINAL BLOCK

弹簧式PCB接线端子，接线方式分笼式弹簧连接和V形弹簧连接，可以连接截面为0.08mm²至10mm²的所有类型的导线，间距2.5mm至10.0mm可供选择，可以同螺钉连接PCB接线端子相互替代使用，增加了灵活性。产品设计符合IEC60998、UL1059、UL486E、CSA C22.2 No.158等国际标准。

PCB Spring terminal blocks, available with two connection methods cage clamp contact and dish clamp contact. Provide the wire size from 0.08mm² to 10mm², Available with different pitches from 2.54mm to 10.0mm. It can be used instead of printed circuit universal screw terminal blocks, more flexible. The product is designed in accordance with IEC 60998, UL1059, CSA C22.2 NO.158 standards.

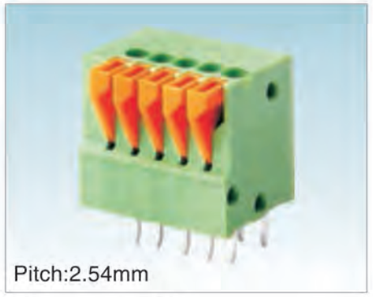

Pitch:2.54mm

MODEL:JL141V

认证/CERTIFICATION	CE	
材质及电镀		
弹片	不锈钢	
焊针	黄铜, 镀锡	
塑件	PA66, UL94V-0	
电气性能		
参考标准	UL	IEC
额定电压	150V	130V
额定电流	2A	6A
使用线径	26-18AWG	1.0mm²
接触电阻	20mΩ	
绝缘电阻	500MΩ/DC500V	
耐电压	AC1300V/1Min	
机械性能		
温度范围	-40℃~+105℃	
瞬时温度	+250℃ 5秒	
剥线长度	9-10mm	

MATERIAL		
Wire guard	Stainless steel	
Pin header	Brass, Sn plated	
Housing	PA66, UL94V-0	
ELECTRICAL		
Standard	UL	IEC
Rated voltage	150V	130V
Rated current	2A	6A
Wire range	26-18AWG	1.0mm²
Contact resistance	20mΩ	
Insulation resistance	500MΩ/DC500V	
Withstanding voltage	AC1300V/1Min	
MECHANICAL		
Temp. range	-40℃~+105℃	
Max. soldering	+250℃ 5 Sec	
Strip length	9-10mm	

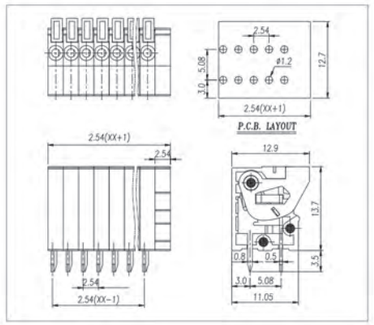

Pitch:2.54mm

MODEL:JL141R

认证/CERTIFICATION	CE	
材质及电镀		
弹片	不锈钢	
焊针	黄铜, 镀锡	
塑件	PA66, UL94V-0	
电气性能		
参考标准	UL	IEC
额定电压	150V	130V
额定电流	2A	6A
使用线径	26-18AWG	1.0mm²
接触电阻	20mΩ	
绝缘电阻	500MΩ/DC500V	
耐电压	AC1300V/1Min	
机械性能		
温度范围	-40℃~+105℃	
瞬时温度	+250℃ 5秒	
剥线长度	9-10mm	

MATERIAL		
Wire guard	Stainless steel	
Pin header	Brass, Sn plated	
Housing	PA66, UL94V-0	
ELECTRICAL		
Standard	UL	IEC
Rated voltage	150V	130V
Rated current	2A	6A
Wire range	26-18AWG	1.0mm²
Contact resistance	20mΩ	
Insulation resistance	500MΩ/DC500V	
Withstanding voltage	AC1300V/1Min	
MECHANICAL		
Temp. range	-40℃~+105℃	
Max. soldering	+250℃ 5 Sec	
Strip length	9-10mm	

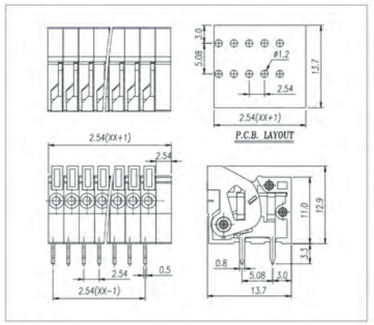

Pitch:2.54mm

MODEL:JL211V-2.54

认证/CERTIFICATION		
材质及电镀		
弹片	不锈钢	
焊针	黄铜, 镀锡	
塑件	PA66, UL94V-0	
电气性能		
参考标准	UL	IEC
额定电压	150V	130V
额定电流	5A	6A
使用线径	26-18AWG	1.0mm²
接触电阻	20mΩ	
绝缘电阻	500MΩ/DC500V	
耐电压	AC1300V/1Min	
机械性能		
温度范围	-40℃~+105℃	
瞬时温度	+250℃ 5秒	
剥线长度	9-10mm	

MATERIAL		
Wire guard	Stainless steel	
Pin header	Brass, Sn plated	
Housing	PA66, UL94V-0	
ELECTRICAL		
Standard	UL	IEC
Rated voltage	150V	130V
Rated current	5A	6A
Wire range	26-18AWG	1.0mm²
Contact resistance	20mΩ	
Insulation resistance	500MΩ/DC500V	
Withstanding voltage	AC1300V/1Min	
MECHANICAL		
Temp. range	-40℃~+105℃	
Max. soldering	+250℃ 5 Sec	
Strip length	9-10mm	

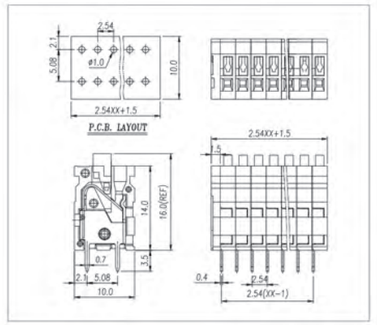

Pitch:2.54mm

MODEL:JL211R-2.54

认证/CERTIFICATION

材质及电镀		
弹片	不锈钢	
焊针	黄铜, 镀锡	
塑件	PA66, UL94V-0	
电气性能		
参考标准	UL	IEC
额定电压	150V	130V
额定电流	5A	6A
使用线径	26-18AWG	1.0mm²
接触电阻	20mΩ	
绝缘电阻	500MΩ/DC500V	
耐电压	AC1300V/1Min	
机械性能		
温度范围	-40℃~+105℃	
瞬时温度	+250℃ 5秒	
剥线长度	9-10mm	

MATERIAL		
Wire guard	Stainless steel	
Pin header	Brass, Sn plated	
Housing	PA66, UL94V-0	
ELECTRICAL		
Standard	UL	IEC
Rated voltage	150V	130V
Rated current	5A	6A
Wire range	26-18AWG	1.0mm²
Contact resistance	20mΩ	
Insulation resistance	500MΩ/DC500V	
Withstanding voltage	AC1300V/1Min	
MECHANICAL		
Temp. range	-40℃~+105℃	
Max. soldering	+250℃ 5 Sec	
Strip length	9-10mm	

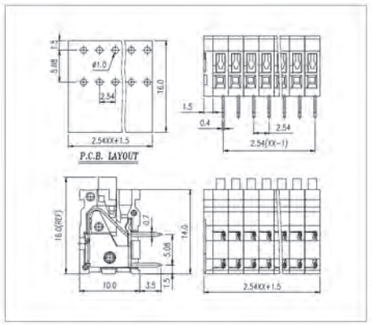

Pitch:5.0mm

MODEL:JL211V-5.0

认证/CERTIFICATION

材质及电镀		
弹片	不锈钢	
焊针	黄铜, 镀锡	
塑件	PA66, UL94V-0	
电气性能		
参考标准	UL	IEC
额定电压	300V	250V
额定电流	10A	15A
使用线径	26-16AWG	1.5mm²
接触电阻	20mΩ	
绝缘电阻	500MΩ/DC500V	
耐电压	AC2000V/1Min	
机械性能		
温度范围	-40℃~+105℃	
瞬时温度	+250℃ 5秒	
剥线长度	8-9mm	

MATERIAL		
Wire guard	Stainless steel	
Pin header	Brass, Sn plated	
Housing	PA66, UL94V-0	
ELECTRICAL		
Standard	UL	IEC
Rated voltage	300V	250V
Rated current	10A	15A
Wire range	26-16AWG	1.5mm²
Contact resistance	20mΩ	
Insulation resistance	500MΩ/DC500V	
Withstanding voltage	AC2000V/1Min	
MECHANICAL		
Temp. range	-40℃~+105℃	
Max. soldering	+250℃ 5 Sec	
Strip length	8-9mm	

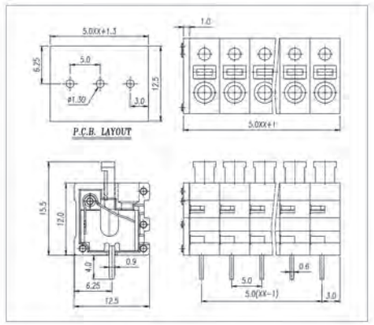

Pitch:5.0mm

MODEL:JL211R-5.0

认证/CERTIFICATION

材质及电镀		
弹片	不锈钢	
焊针	黄铜, 镀锡	
塑件	PA66, UL94V-0	
电气性能		
参考标准	UL	IEC
额定电压	300V	250V
额定电流	10A	15A
使用线径	26-16AWG	1.5mm²
接触电阻	20mΩ	
绝缘电阻	500MΩ/DC500V	
耐电压	AC2000V/1Min	
机械性能		
温度范围	-40℃~+105℃	
瞬时温度	+250℃ 5秒	
剥线长度	8-9mm	

MATERIAL		
Wire guard	Stainless steel	
Pin header	Brass, Sn plated	
Housing	PA66, UL94V-0	
ELECTRICAL		
Standard	UL	IEC
Rated voltage	300V	250V
Rated current	10A	15A
Wire range	26-16AWG	1.5mm²
Contact resistance	20mΩ	
Insulation resistance	500MΩ/DC500V	
Withstanding voltage	AC2000V/1Min	
MECHANICAL		
Temp. range	-40℃~+105℃	
Max. soldering	+250℃ 5 Sec	
Strip length	8-9mm	

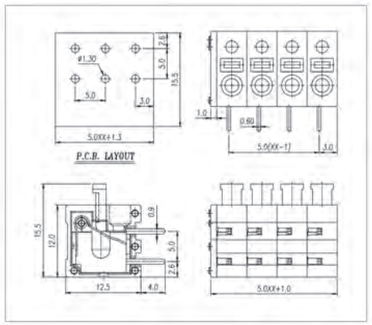

Pitch:5.08/7.62mm

MODEL:JL142V

认证/CERTIFICATION

材质及电镀		
弹片	不锈钢	
焊针	黄铜, 镀锡	
塑件	PA66, UL94V-0	
电气性能		
参考标准	UL	IEC
额定电压	300V	250V
额定电流	10A	15A
使用线径	22-16AWG	1.5mm²
接触电阻	20mΩ	
绝缘电阻	500MΩ/DC500V	
耐电压	AC2000V/1Min	
机械性能		
温度范围	-40℃~+105℃	
瞬时温度	+250℃ 5秒	
剥线长度	9-10mm	

MATERIAL		
Wire guard	Stainless steel	
Pin header	Brass, Sn plated	
Housing	PA66, UL94V-0	
ELECTRICAL		
Standard	UL	IEC
Rated voltage	300V	250V
Rated current	10A	15A
Wire range	22-16AWG	1.5mm²
Contact resistance	20mΩ	
Insulation resistance	500MΩ/DC500V	
Withstanding voltage	AC2000V/1Min	
MECHANICAL		
Temp. range	-40℃~+105℃	
Max. soldering	+250℃ 5 Sec	
Strip length	9-10mm	

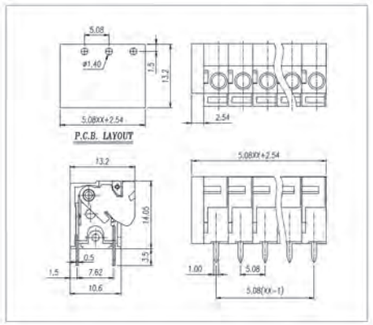

Pitch:5.08/7.62mm

MODEL:JL142R

认证/CERTIFICATION

材质及电镀		
弹片	不锈钢	
焊针	黄铜, 镀锡	
塑件	PA66, UL94V-0	
电气性能		
参考标准	UL	IEC
额定电压	300V	250V
额定电流	10A	15A
使用线径	22-16AWG	1.5mm²
接触电阻	20mΩ	
绝缘电阻	500MΩ/DC500V	
耐电压	AC2000V/1Min	
机械性能		
温度范围	-40℃~+105℃	
瞬时温度	+250℃ 5秒	
剥线长度	9-10mm	

MATERIAL		
Wire guard	Stainless steel	
Pin header	Brass, Sn plated	
Housing	PA66, UL94V-0	
ELECTRICAL		
Standard	UL	IEC
Rated voltage	300V	250V
Rated current	10A	15A
Wire range	22-16AWG	1.5mm²
Contact resistance	20mΩ	
Insulation resistance	500MΩ/DC500V	
Withstanding voltage	AC2000V/1Min	
MECHANICAL		
Temp. range	-40℃~+105℃	
Max. soldering	+250℃ 5 Sec	
Strip length	9-10mm	

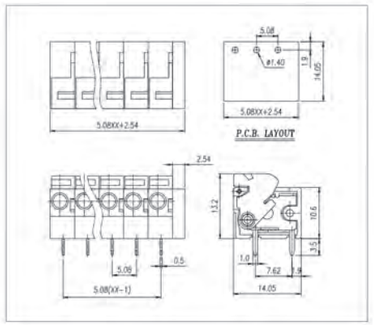

Pitch:3.81/5.0/7.5/10.0mm

MODEL:JL235A

认证/CERTIFICATION

材质及电镀		
黄片	不锈钢	
焊针	黄铜, 镀锡	
塑件	PA66, UL94V-0	
电气性能		
参考标准	UL	IEC
额定电压	300V	250V
额定电流	5A	15A
使用线径	22-18AWG	1.0mm²
接触电阻	20mΩ	
绝缘电阻	500MΩ/DC500V	
耐电压	AC2000V/1Min	
机械性能		
温度范围	-40℃~+105℃	
瞬时温度	+250℃ 5秒	
剥线长度	9-10mm	

MATERIAL		
Wire guard	Stainless steel	
Pin header	Brass, Sn plated	
Housing	PA66, UL94V-0	
ELECTRICAL		
Standard	UL	IEC
Rated voltage	300V	250V
Rated current	5A	15A
Wire range	22-18AWG	1.0mm²
Contact resistance	20mΩ	
Insulation resistance	500MΩ/DC500V	
Withstanding voltage	AC2000V/1Min	
MECHANICAL		
Temp. range	-40℃~+105℃	
Max. soldering	+250℃ 5 Sec	
Strip length	9-10mm	

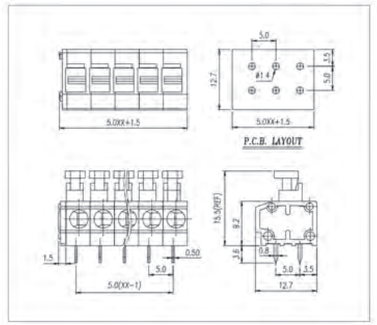

Pitch:3.81/5.0/7.5/10.0mm

MODEL:JL235B

认证/CERTIFICATION	
材质及电镀	
弹片	不锈钢
焊针	黄铜, 镀锡
塑件	PA66, UL94V-0
电气性能	
参考标准	UL / IEC
额定电压	300V / 250V
额定电流	5A / 15A
使用线径	22-18AWG / 1.0mm²
接触电阻	20mΩ
绝缘电阻	500MΩ/DC500V
耐电压	AC2000V/1Min
机械性能	
温度范围	-40℃~+105℃
瞬时温度	+250℃ 5秒
剥线长度	9-10mm

MATERIAL	
Wire guard	Stainless steel
Pin header	Brass, Sn plated
Housing	PA66, UL94V-0
ELECTRICAL	
Standard	UL / IEC
Rated voltage	300V / 250V
Rated current	5A / 15A
Wire range	22-18AWG / 1.0mm²
Contact resistance	20mΩ
Insulation resistance	500MΩ/DC500V
Withstanding voltage	AC2000V/1Min
MECHANICAL	
Temp. range	-40℃~+105℃
Max. soldering	+250℃ 5 Sec
Strip length	9-10mm

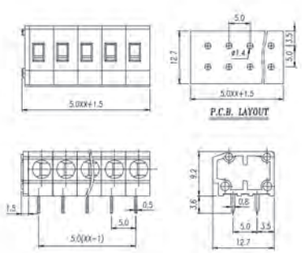

Pitch:2.5mm

MODEL:JL250-2.54

认证/CERTIFICATION	
材质及电镀	
焊针	磷青铜, 镀锡
塑件	PA66, UL94V-0
电气性能	
参考标准	UL / IEC
额定电压	300V / 250V
额定电流	4A / 6A
使用线径	28-20AWG / 0.5mm²
接触电阻	20mΩ
绝缘电阻	500MΩ/DC500V
耐电压	AC2000V/1Min
机械性能	
温度范围	-40℃~+105℃
瞬时温度	+250℃ 5秒
剥线长度	9-10mm

MATERIAL	
Pin header	Phosphor bronze, Sn plated
Housing	PA66, UL94V-0
ELECTRICAL	
Standard	UL / IEC
Rated voltage	300V / 250V
Rated current	4A / 6A
Wire range	28-20AWG / 0.5mm²
Contact resistance	20mΩ
Insulation resistance	500MΩ/DC500V
Withstanding voltage	AC2000V/1Min
MECHANICAL	
Temp. range	-40℃~+105℃
Max. soldering	+250℃ 5 Sec
Strip length	9-10mm

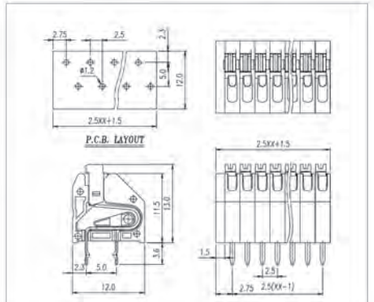

Pitch:3.5mm

MODEL:JL250-3.5

认证/CERTIFICATION	
材质及电镀	
焊针	磷青铜, 镀锡
塑件	PA66, UL94V-0
电气性能	
参考标准	UL / IEC
额定电压	300V / 450V
额定电流	7A / 8A
使用线径	26-16AWG / 1.5mm²
接触电阻	20mΩ
绝缘电阻	500MΩ/DC500V
耐电压	AC2000V/1Min
机械性能	
温度范围	-40℃~+105℃
瞬时温度	+250℃ 5秒
剥线长度	9-10mm

MATERIAL	
Pin header	Phosphor bronze, Sn plated
Housing	PA66, UL94V-0
ELECTRICAL	
Standard	UL / IEC
Rated voltage	300V / 450V
Rated current	7A / 8A
Wire range	26-16AWG / 1.5mm²
Contact resistance	20mΩ
Insulation resistance	500MΩ/DC500V
Withstanding voltage	AC2000V/1Min
MECHANICAL	
Temp. range	-40℃~+105℃
Max. soldering	+250℃ 5 Sec
Strip length	9-10mm

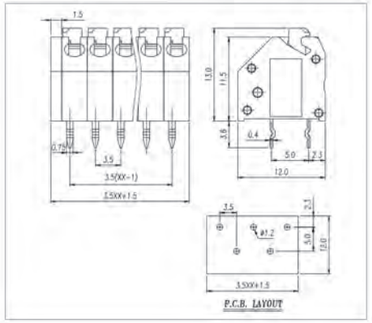

Pitch:5.0mm

MODEL:JL236

认证/CERTIFICATION	
材质及电镀	
弹片	不锈钢
焊针	黄铜, 镀锡
塑件	PA66, UL94V-0
电气性能	
参考标准	UL / IEC
额定电压	300V / 450V
额定电流	8A / 12A
使用线径	22-16AWG / 1.5mm²
接触电阻	20mΩ
绝缘电阻	500MΩ/DC500V
耐电压	AC2000V/1Min
机械性能	
温度范围	-40℃~+105℃
瞬时温度	+250℃ 5秒
剥线长度	9-10mm

MATERIAL	
Wire guard	Stainless steel
Pin header	Brass, Sn plated
Housing	PA66, UL94V-0
ELECTRICAL	
Standard	UL / IEC
Rated voltage	300V / 250V
Rated current	8A / 12A
Wire range	22-16AWG / 1.5mm²
Contact resistance	20mΩ
Insulation resistance	500MΩ/DC500V
Withstanding voltage	AC2000V/1Min
MECHANICAL	
Temp. range	-40℃~+105℃
Max. soldering	+250℃ 5 Sec
Strip length	9-10mm

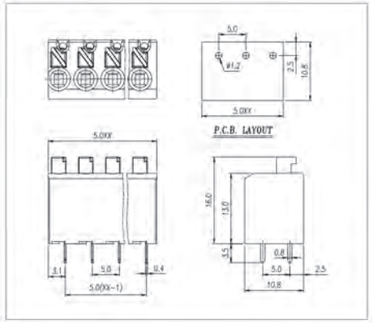

Pitch:5.0mm

MODEL:JL243A

认证/CERTIFICATION	
材质及电镀	
弹片	不锈钢
焊针	黄铜, 镀锡
塑件	PA66, UL94V-0
电气性能	
参考标准	UL / IEC
额定电压	300V / 450V
额定电流	10A / 15A
使用线径	26-14AWG / 1.5mm²
接触电阻	20mΩ
绝缘电阻	500MΩ/DC500V
耐电压	AC2000V/1Min
机械性能	
温度范围	-40℃~+105℃
瞬时温度	+250℃ 5秒
剥线长度	5-6mm

MATERIAL	
Wire guard	Stainless steel
Pin header	Brass, Sn plated
Housing	PA66, UL94V-0
ELECTRICAL	
Standard	UL / IEC
Rated voltage	300V / 450V
Rated current	10A / 15A
Wire range	26-14AWG / 1.5mm²
Contact resistance	20mΩ
Insulation resistance	500MΩ/DC500V
Withstanding voltage	AC2000V/1Min
MECHANICAL	
Temp. range	-40℃~+105℃
Max. soldering	+250℃ 5 Sec
Strip length	5-6mm

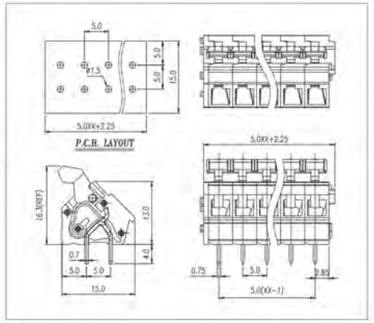

Pitch:5.0/5.08/7.5/7.62mm

MODEL:JL245-5.0/5.08

认证/CERTIFICATION	
材质及电镀	
弹片	不锈钢
焊针	黄铜, 镀锡
塑件	PA66, UL94V-0
电气性能	
参考标准	UL / IEC
额定电压	300V / 450V
额定电流	10A / 15A
使用线径	26-14AWG / 1.5mm²
接触电阻	20mΩ
绝缘电阻	500MΩ/DC500V
耐电压	AC2000V/1Min
机械性能	
温度范围	-40℃~+105℃
瞬时温度	+250℃ 5秒
剥线长度	5-6mm

MATERIAL	
Wire guard	Stainless steel
Pin header	Brass, Sn plated
Housing	PA66, UL94V-0
ELECTRICAL	
Standard	UL / IEC
Rated voltage	300V / 450V
Rated current	10A / 15A
Wire range	26-14AWG / 1.5mm²
Contact resistance	20mΩ
Insulation resistance	500MΩ/DC500V
Withstanding voltage	AC2000V/1Min
MECHANICAL	
Temp. range	-40℃~+105℃
Max. soldering	+250℃ 5 Sec
Strip length	5-6mm

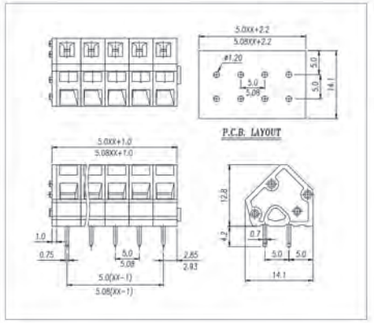

MODEL:JL239V

认证/CERTIFICATION		

材质及电镀		
弹片	不锈钢	
焊针	黄铜, 镀锡	
塑件	PA66, UL94V-0	
电气性能		
参考标准	UL	IEC
额定电压	600V	800V
额定电流	40A	41A
使用线径	24-8 AWG	
接触电阻		
绝缘电阻		
耐电压		
机械性能		
温度范围	-40℃~+105℃	
瞬时温度	+250℃ 5秒	
剥线长度	15mm	

MATERIAL		
Wire guard	Stainless steel	
Pin header	Brass, Sn plated	
Housing	PA66, UL94V-0	
ELECTRICAL		
Standard	UL	IEC
Rated voltage	600V	800V
Rated current	40A	41A
Wire range	24-8 AWG	
Contact resistance		
Insulation resistance		
Withstanding voltage		
MECHANICAL		
Temp. range	-40℃~+105℃	
Max. soldering	+250℃ 5 Sec	
Strip length	9-10mm	

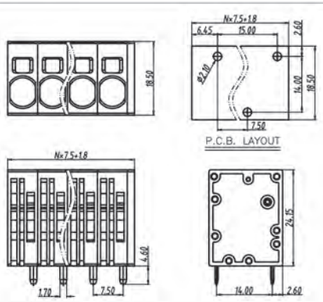

贯通式接线端子
FEED THROUGH TERMINAL BLOCK

贯通式接线端子，将二导体方便、可靠连接起来，可以连接截面为0.5mm²至10mm²的所有类型的导线，间距8.2mm至14.5mm可供选择，分带弹片与不带弹片两大类型。产品设计符合IEC60998、UL1059、UL486E、CSA C22.2 No.158等国际标准。

Feed through terminal blocks, connecting with two conductors easily and credibility, Provide the wire size from 0.5mm² to 10mm², Available with different pitches from 2.54mm to 15.0mm, Available for with fuse and without fuse. The product is designed in accordance with IEC 60998, UL1059, CSA C22.2 NO.158 standards.

MODEL: MY__HS

认证/CERTIFICATION	
底部: 平底型	Base: Flat-bottom
螺丝: 钢，镀锌	Screws: Steel, Zn plated
方块: 铁复合铜，镀锌	Clamp: Cladded copper strips, Zn plated
材质: PA66，UL94V-2	Housing material: PA66, UL94V-2
温度范围: -40℃~+105℃	Temp. range: -40℃~+105℃
接线排数: 2-12P	Poles available: 2-12P

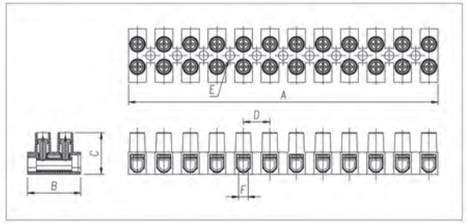

型号 Model	线径 mm²	UL		ICE		螺丝 Screw	尺寸 Dimensions(mm/in)							
		电压	电流	电压	电流		Unit	A	B	C	D	E	F
MY8HS+0	0.5-4.0	300V	20A	450V	24A	M2.6x5	mm	96.0	17.80	14.30	8.20	3.00	3.0x3.4
MY10HS+0	1.0-6.0	300V	26A	750V	24A	M3.0x6	mm	116.7	20.00	15.70	10.00	3.50	3.6x3.7

MODEL: MY__HS+1.2

认证/CERTIFICATION	
底部: H型底部加高1.2mm	Base: With 1.2mm elevated base
螺丝: 钢，镀锌	Screws: Steel, Zn plated
方块: 铁复合铜，镀锌	Clamp: Cladded copper strips, Zn plated
材质: PA66，UL94V-2	Housing material: PA66, UL94V-2
温度范围: -40℃~+105℃	Temp. range: -40℃~+105℃
接线排数: 2-12P	Poles available: 2-12P

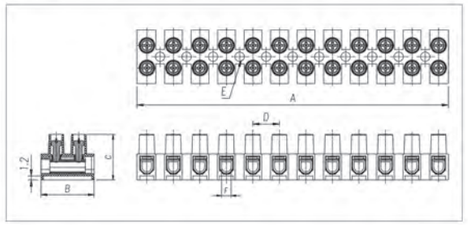

型号 Model	线径 mm²	UL		ICE		螺丝 Screw	尺寸 Dimensions(mm/in)							
		电压	电流	电压	电流		Unit	A	B	C	D	E	F
MY8HS+1.2	0.5-4.0	300V	20A	450V	24A	M2.6x5	mm	96.0	17.80	15.50	8.20	3.00	3.0x3.4
MY10HS+1.2	1.0-6.0	300V	26A	750V	24A	M3.0x6	mm	116.7	20.00	16.90	10.00	3.50	3.6x3.7

MODEL: MY__HS+4.3

认证/CERTIFICATION	
底部: H型底部加高4.3mm	Base: With 4.3mm elevated base
螺丝: 钢，镀锌	Screws: Steel, Zn plated
方块: 铁复合铜，镀锌	Clamp: Cladded copper strips, Zn plated
材质: PA66，UL94V-2	Housing material: PA66, UL94V-2
温度范围: -40℃~+105℃	Temp. range: -40℃~+105℃
接线排数: 2-12P	Poles available: 2-12P

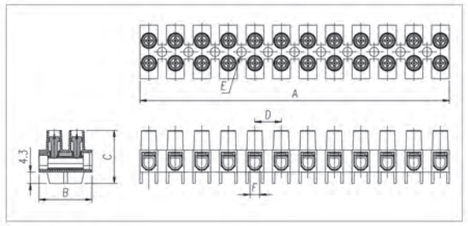

型号 Model	线径 mm²	UL		ICE		螺丝 Screw	尺寸 Dimensions(mm/in)							
		电压	电流	电压	电流		Unit	A	B	C	D	E	F
MY8HS+4.3	0.5-4.0	300V	20A	450V	24A	M2.6x5	mm	96.0	17.80	18.60	8.20	3.00	3.0x3.4
MY10HS+4.3	1.0-6.0	300V	26A	750V	24A	M3.0x6	mm	116.5	20.00	20.00	10.00	3.50	3.6x3.7

MODEL: MY__H

认证/CERTIFICATION

底部: 平底型	Base: Flat-bottom
螺丝: 钢，镀锌	Screws: Steel, Zn plated
方块: 黄铜，镀镍	Clamp: Brass, Ni plated
材质: PA66，UL94V-2	Housing material: PA66, UL94V-2
温度范围: -40℃~+105℃	Temp. range: -40℃~+105℃
接线排数: 2-12P	Poles available: 2-12P

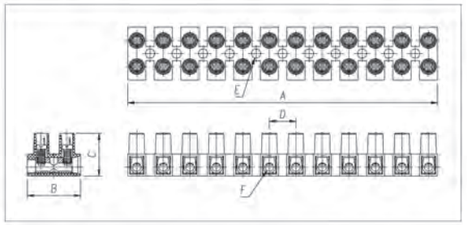

型号 Model	线径 mm²	UL 电压	UL 电流	ICE 电压	ICE 电流	螺丝 Screw	尺寸 Dimensions(mm/in) Unit	A	B	C	D	E	F
MY8H+0	1.5	300V	17.5A	450V	24A	M2.6x5	mm	94.0	17.0	13.00	8.00	3.00	2.80
MY10H+0	2.5	300V	28A	750V	24A	M3.0x6	mm	116.7	20.3	16.00	10.00	3.50	3.20
MY12H+0	6.0	600V	41A	750V	45A	M3.5x7	mm	139.7	24.0	17.80	12.00	3.90	3.90
MY16H+0	10.0	600V	57A	750V	60A	M4.0x9	mm	171.3	32.0	23.80	14.60	4.40	4.80

MODEL: MY__H+1.2

认证/CERTIFICATION

底部: H型底部加高1.2mm	Base: With 1.2mm elevated base
螺丝: 钢，镀锌	Screws: Steel, Zn plated
方块: 黄铜，镀镍	Clamp: Brass, Ni plated
材质: PA66，UL94V-2	Housing material: PA66, UL94V-2
温度范围: -40℃~+105℃	Temp. range: -40℃~+105℃
接线排数: 2-12P	Poles available: 2-12P

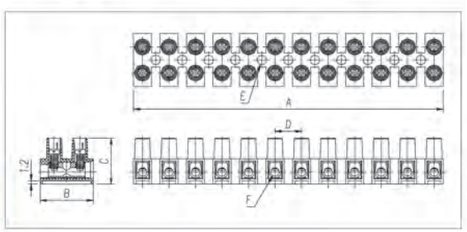

型号 Model	线径 mm²	UL 电压	UL 电流	ICE 电压	ICE 电流	螺丝 Screw	尺寸 Dimensions(mm/in) Unit	A	B	C	D	E	F
MY8H+1.2	1.5	300V	17.5A	450V	24A	M2.6x5	mm	94.0	17.0	14.20	8.00	3.00	2.80
MY10H+1.2	2.5	300V	28A	750V	24A	M3.0x6	mm	116.7	20.3	17.20	10.00	3.50	3.20
MY12H+1.2	6.0	600V	41A	750V	45A	M3.5x7	mm	139.7	24.0	19.00	12.00	3.90	3.90
MY16H+1.2	10.0	600V	57A	750V	60A	M4.0x9	mm	171.3	32.0	25.00	14.60	4.40	4.80

MODEL: MY__H+4.3

认证/CERTIFICATION

底部: H型底部加高4.3mm	Base: With 4.3mm elevated base
螺丝: 钢，镀锌	Screws: Steel, Zn plated
方块: 黄铜，镀镍	Clamp: Brass, Ni plated
材质: PA66，UL94V-2	Housing material: PA66, UL94V-2
温度范围: -40℃~+105℃	Temp. range: -40℃~+105℃
接线排数: 2-12P	Poles available: 2-12P

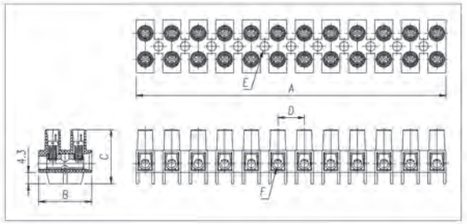

型号 Model	线径 mm²	UL 电压	UL 电流	ICE 电压	ICE 电流	螺丝 Screw	尺寸 Dimensions(mm/in) Unit	A	B	C	D	E	F
MY8H+4.3	1.5	300V	17.5A	450V	24A	M2.6x5	mm	94.0	17.0	17.30	8.20	3.00	2.80
MY10H+4.3	2.5	300V	28A	750V	24A	M3.0x6	mm	116.7	20.3	20.30	10.00	3.50	3.20
MY12H+4.3	6.0	600V	41A	750V	45A	M3.5x7	mm	139.7	24.0	22.10	12.00	3.90	3.90
MY16H+4.3	10.0	600V	57A	750V	60A	M4.0x9	mm	171.3	32.0	28.10	14.60	4.40	4.80

MODEL: MY__HW

带弹片 Wire Protector

认证/CERTIFICATION

底部: 平底型	Base: Flat-bottom
螺丝: 钢，镀锌	Screws: Steel Ni plated
方块: 黄铜，镀镍	Clamp: Brass, Ni plated
弹片: 磷青铜，镀镍	Shrapnel: Phosphor bronze, Ni plated
材质: PA66，UL94V-2	Housing material: PA66, UL94V-2
温度范围: -40℃~+105℃	Temp. range: -40℃~+105℃
接线排数: 2-12P	Poles available: 2-12P

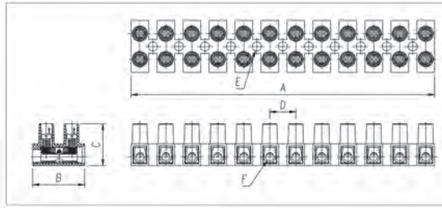

型号 Model	线径 mm²	UL 电压	UL 电流	ICE 电压	ICE 电流	螺丝 Screw	尺寸 Dimensions(mm/in) Unit	A	B	C	D	E	F
MY8HW+0	1.5	300V	17.5A	450V	24A	M2.6x5	mm	94.0	17.0	13.00	8.00	3.00	2.80
MY10HW+0	2.5	300V	28A	750V	24A	M3.0x6	mm	116.7	20.3	16.00	10.00	3.50	3.20
MY12HW+0	6.0	600V	41A	750V	45A	M3.5x7	mm	139.7	24.0	17.80	12.00	3.90	3.90
MY16HW+0	10.0	600V	57A	750V	60A	M4.0x9	mm	171.3	32.0	23.80	14.60	4.40	4.80

MODEL: MY__HW+1.2

带弹片 Wire Protector

认证/CERTIFICATION

底部: H型底部加高1.2mm	Base: With 1.2mm elevated base
螺丝: 钢，镀锌	Screws: Steel Ni plated
方块: 黄铜，镀镍	Clamp: Brass, Ni plated
弹片: 磷青铜，镀镍	Shrapnel: Phosphor bronze, Ni plated
材质: PA66，UL94V-2	Housing material: PA66, UL94V-2
温度范围: -40℃~+105℃	Temp. range: -40℃~+105℃
接线排数: 2-12P	Poles available: 2-12P

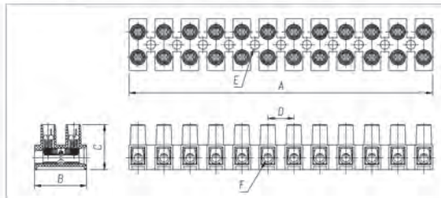

型号 Model	线径 mm²	UL 电压	UL 电流	ICE 电压	ICE 电流	螺丝 Screw	尺寸 Dimensions(mm/in) Unit	A	B	C	D	E	F
MY8HW+1.2	1.5	300V	17.5A	450V	24A	M2.6x5	mm	94.0	17.0	14.20	8.00	3.00	2.80
MY10HW+1.2	2.5	300V	28A	750V	24A	M3.0x6	mm	116.7	20.3	17.20	10.00	3.50	3.20
MY12HW+1.2	6.0	600V	41A	750V	45A	M3.5x7	mm	139.7	24.0	19.00	12.00	3.90	3.90
MY16HW+1.2	10.0	600V	57A	750V	60A	M4.0x9	mm	171.3	32.0	25.00	14.60	4.40	4.80

MODEL: MY__HW+4.3

带弹片 Wire Protector

认证/CERTIFICATION

底部: H型底部加高4.3mm	Base: With 4.3mm elevated base
螺丝: 钢，镀锌	Screws: Steel Ni plated
方块: 黄铜，镀镍	Clamp: Brass, Ni plated
弹片: 磷青铜，镀镍	Shrapnel: Phosphor bronze, Ni plated
材质: PA66，UL94V-2	Housing material: PA66, UL94V-2
温度范围: -40℃~+105℃	Temp. range: -40℃~+105℃
接线排数: 2-12P	Poles available: 2-12P

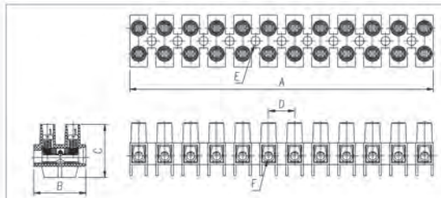

型号 Model	线径 mm²	UL 电压	UL 电流	ICE 电压	ICE 电流	螺丝 Screw	尺寸 Dimensions(mm/in) Unit	A	B	C	D	E	F
MY8HW+4.3	1.5	300V	17.5A	450V	24A	M2.6x5	mm	94.0	17.0	17.30	8.00	3.00	2.80
MY10HW+4.3	2.5	300V	28A	750V	24A	M3.0x6	mm	116.7	20.3	20.30	10.00	3.50	3.20
MY12HW+4.3	6.0	600V	41A	750V	45A	M3.5x7	mm	139.7	24.0	22.10	12.00	3.90	3.90
MY16HW+4.3	10.0	600V	57A	750V	60A	M4.0x9	mm	171.3	32.0	28.10	14.60	4.40	4.80

贯通式接线端子
FEED THROUGH TERMINAL BLOCK

Pitch:10.0mm

MODEL:JL501

认证/CERTIFICATION		

材质及电镀		
螺丝	M3.0, 钢, 镀锌	
弹片	磷青铜, 镀镍	
方块	黄铜, 镀镍	
塑件	PA66, UL94V-0	
电气性能		
参考标准	UL	IEC
额定电压	300V	250V
额定电流	6.3A	6.3A
使用线径	18-14AWG	2.5mm²
接触电阻	20mΩ	
绝缘电阻	500MΩ/DC500V	
耐电压	AC2000V/1Min	
机械性能		
温度范围	-40℃~+105℃	
扭矩	5.10kgf-cm/0.5Nm/4.43Lbin	
剥线长度	5-6mm	

MATERIAL		
Screws	M3.0 Steel Zn plated	
Shrapnel	Phosphor bronze, Ni plated	
Clamp	Brass, Ni plated	
Housing	PA66, UL94V-0	
ELECTRICAL		
Standard	UL	IEC
Rated voltage	300V	250V
Rated current	6.3A	6.3A
Wire range	18-14AWG	2.5mm²
Contact resistance	20mΩ	
Insulation resistance	500MΩ/DC500V	
Withstanding voltage	AC2000V/1Min	
MECHANICAL		
Temp. range	-40℃~+105℃	
Torque	5.10kgf-cm/0.5Nm/4.43Lbin	
Strip length	5-6mm	

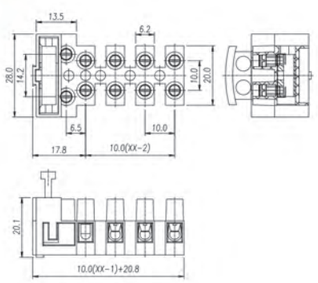

http://www.cxjialian.com
Terminal Block Professional Manufacturer

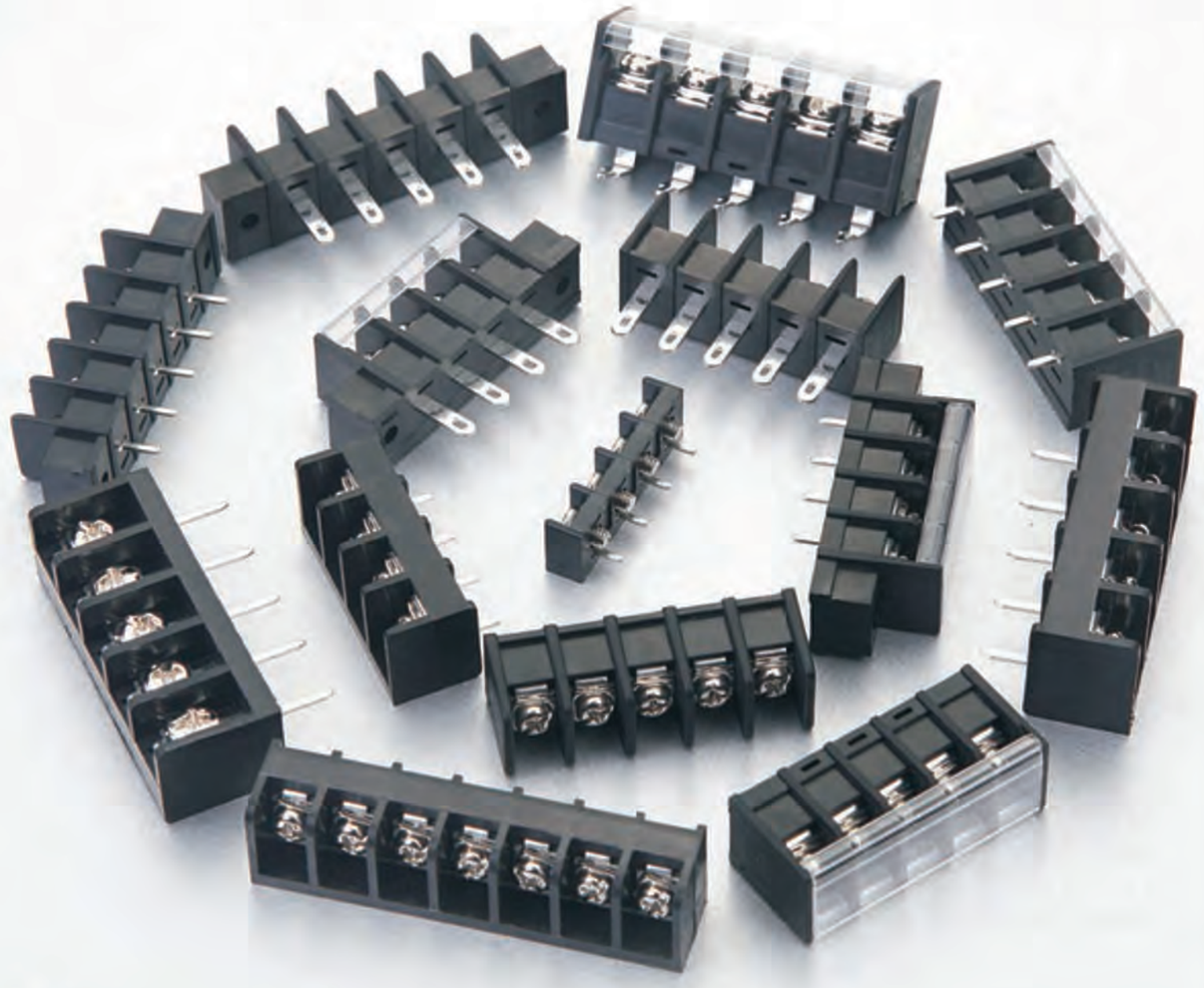

栅板式接线端子
BARRIER TERMINAL BLOCK

栅栏式接线端子，接线直观明了，可以连接截面为0.5mm²至6mm²的所有类型的导线，间距6.35-14mm可供选择，可提供有盖、无盖，有无固定孔等款式。产品设计符合IEC60998、UL1059、UL486E、CSA C22.2 No.158等国际标准。

Barrier terminal blocks, connecting easily, provide the size from 0.5mm² to 6.0mm², Available with different pitches from 6.35mm to 14.0mm. with cover and without cover. The product is designed in accordance with IEC 60998, UL1059, CSA C22.2 NO.158 standards.

MODEL:JL25C

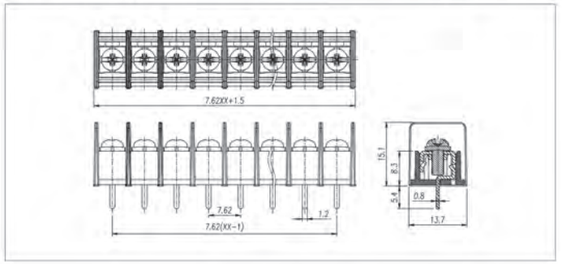

MODEL:JL25S

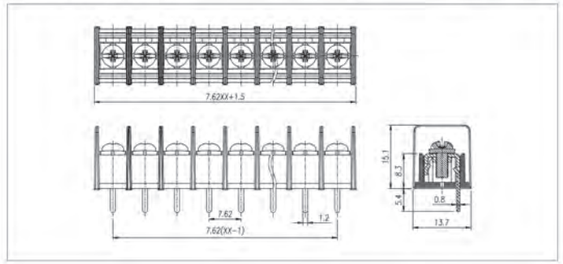

MODEL:JL25CM

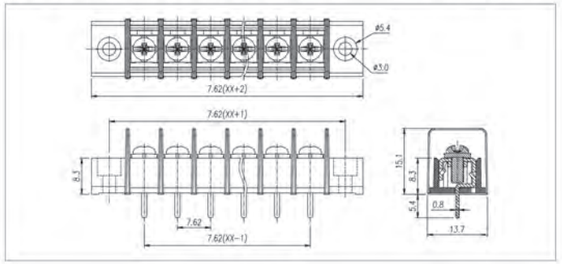

MODEL:JL25SM

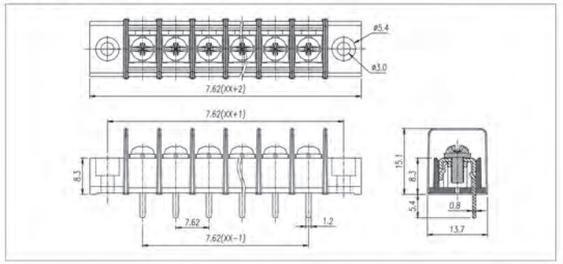

MODEL:JL25H

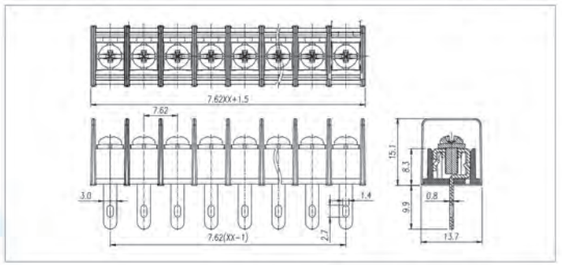

MODEL:JL25R

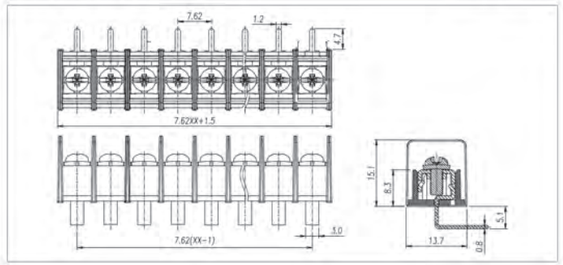

MODEL:JL25HM

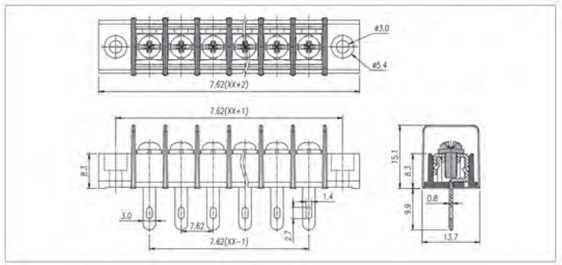

MODEL:JL25RM

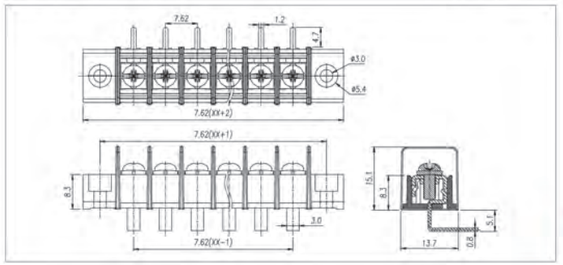

材质及电镀	
螺丝	M3.0, 钢, 镀镍
焊脚	黄铜, 镀锡
塑件	PA66, UL94V-0

电气性能		
参考标准	UL	IEC
额定电压	300V	250V
额定电流	15A	24A
使用线径	22-14AWG	2.5mm²
接触电阻	20m	
绝缘电阻	Ω500MΩ/DC500V	
耐电压	AC2000V/1Min	
温度范围	-40℃~+105℃	
扭矩	5.10kgf-cm/0.5Nm/4.43Lbin	

MATERIAL	
Screws	M3.0 Steel Ni plated
Pin Header	Brass, Sn plated
Housing	PA66, UL94V-0

ELECTRICAL		
Standard	UL	IEC
Rated voltage	300V	250V
Rated current	15A	24A
Wire range	22-14AWG	2.5mm²
Contact Resistance	20mΩ	
Insulation resistance	500MΩ/DC500V	
Withstanding voltage	AC2000V/1Min	
Temp. range	-40℃~+105℃	
Torque	5.10kgf-cm/0.5Nm/4.43Lbin	

材质及电镀	
螺丝	M3.0, 钢, 镀镍
焊脚	黄铜, 镀锡
塑件	PA66, UL94V-0

电气性能		
参考标准	UL	IEC
额定电压	300V	250V
额定电流	15A	24A
使用线径	22-14AWG	2.5mm²
接触电阻	20m	
绝缘电阻	Ω500MΩ/DC500V	
耐电压	AC2000V/1Min	
温度范围	-40℃~+105℃	
扭矩	5.10kgf-cm/0.5Nm/4.43Lbin	

MATERIAL	
Screws	M3.0 Steel Ni plated
Pin Header	Brass, Sn plated
Housing	PA66, UL94V-0

ELECTRICAL		
Standard	UL	IEC
Rated voltage	300V	250V
Rated current	15A	24A
Wire range	22-14AWG	2.5mm²
Contact Resistance	20mΩ	
Insulation resistance	500MΩ/DC500V	
Withstanding voltage	AC2000V/1Min	
Temp. range	-40℃~+105℃	
Torque	5.10kgf-cm/0.5Nm/4.43Lbin	

MODEL:JL35C

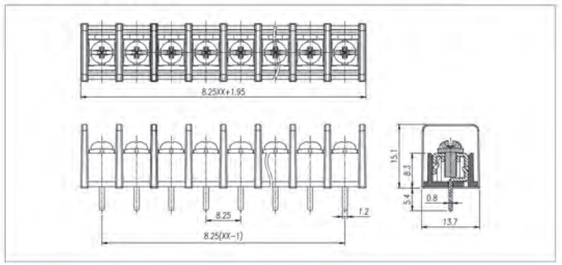

MODEL:JF35S

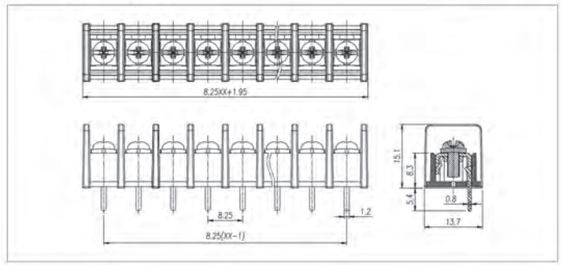

MODEL:JL25CM

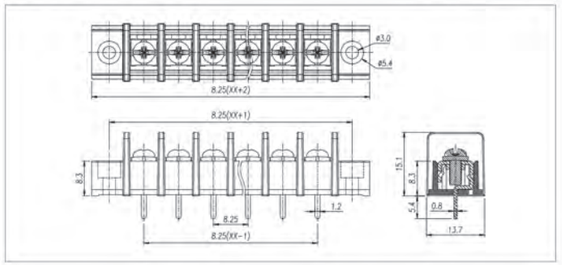

MODEL:JL25SM

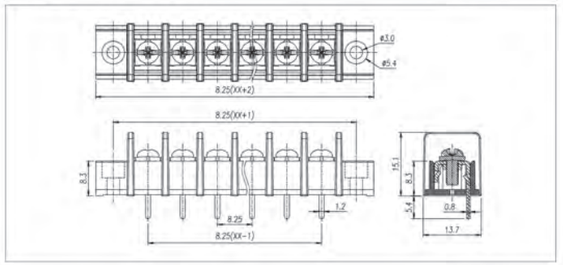

MODEL:JL35H

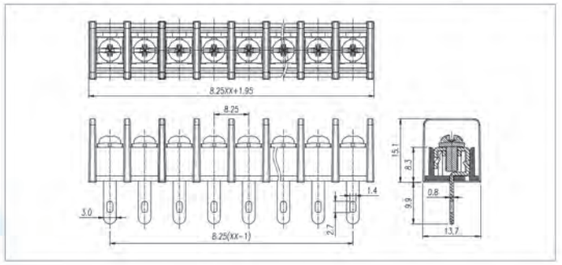

MODEL:JL35R

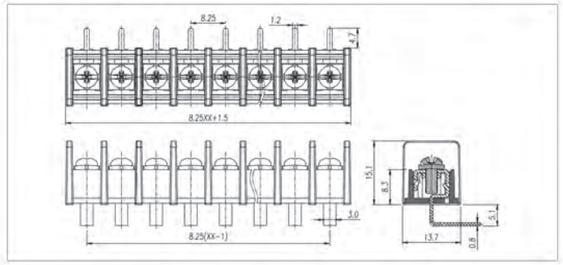

MODEL:JL35HM

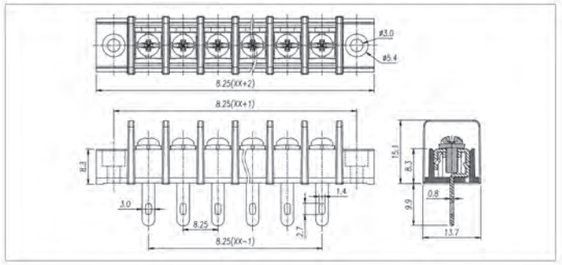

MODEL:JL35RM

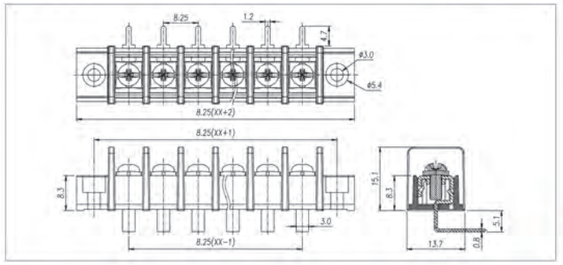

材质及电镀	
螺丝	M3.0, 钢, 镀镍
焊脚	黄铜, 镀锡
塑件	PA66, UL94V-0

电气性能		
参考标准	UL	IEC
额定电压	300V	250V
额定电流	15A	24A
使用线径	22-14AWG	2.5mm²
接触电阻	20mΩ	
绝缘电阻	500MΩ/DC500V	
耐电压	AC2000V/1Min	
温度范围	-40℃~+105℃	
扭矩	5.10kgf-cm/0.5Nm/4.43Lbin	

MATERIAL	
Screws	M3.0 Steel Ni plated
Pin Header	Brass, Sn plated
Housing	PA66, UL94V-0

ELECTRICAL		
Standard	UL	IEC
Rated voltage	300V	250V
Rated current	15A	24A
Wire range	22-14AWG	2.5mm²
Contact Resistance	20mΩ	
Insulation resistance	500MΩ/DC500V	
Withstanding voltage	AC2000V/1Min	
Temp. range	-40℃~+105℃	
Torque	5.10kgf-cm/0.5Nm/4.43Lbin	

材质及电镀	
螺丝	M3.0, 钢, 镀镍
焊脚	黄铜, 镀锡
塑件	PA66, UL94V-0

电气性能		
参考标准	UL	IEC
额定电压	300V	250V
额定电流	15A	24A
使用线径	22-14AWG	2.5mm²
接触电阻	20mΩ	
绝缘电阻	500MΩ/DC500V	
耐电压	AC2000V/1Min	
温度范围	-40℃~+105℃	
扭矩	5.10kgf-cm/0.5Nm/4.43Lbin	

MATERIAL	
Screws	M3.0 Steel Ni plated
Pin Header	Brass, Sn plated
Housing	PA66, UL94V-0

ELECTRICAL		
Standard	UL	IEC
Rated voltage	300V	250V
Rated current	15A	24A
Wire range	22-14AWG	2.5mm²
Contact Resistance	20mΩ	
Insulation resistance	500MΩ/DC500V	
Withstanding voltage	AC2000V/1Min	
Temp. range	-40℃~+105℃	
Torque	5.10kgf-cm/0.5Nm/4.43Lbin	

MODEL:JL45C

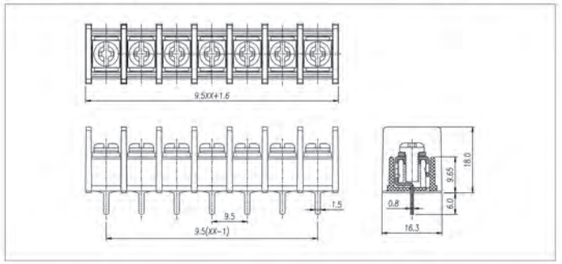

MODEL:JL45S

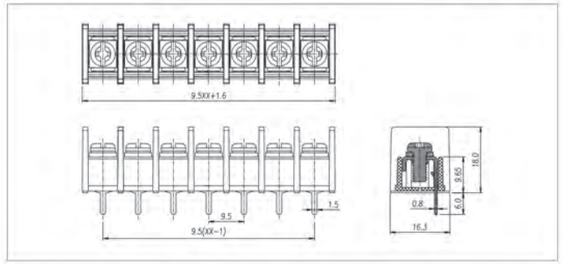

MODEL:JF45CM

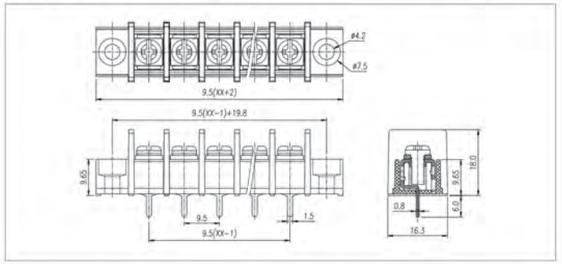

MODEL:JF45SM

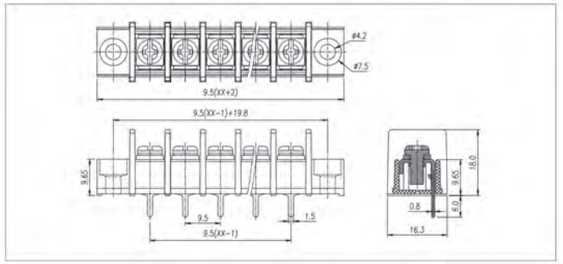

MODEL:JL45H

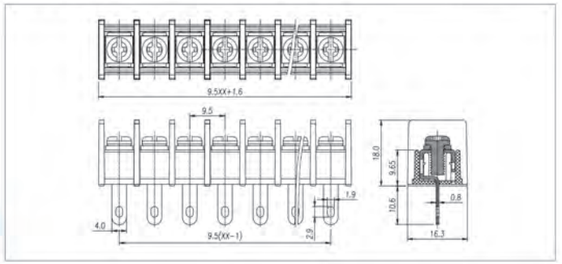

MODEL:JL45R

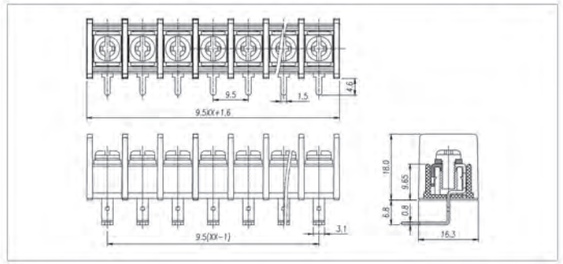

MODEL:JL45HM

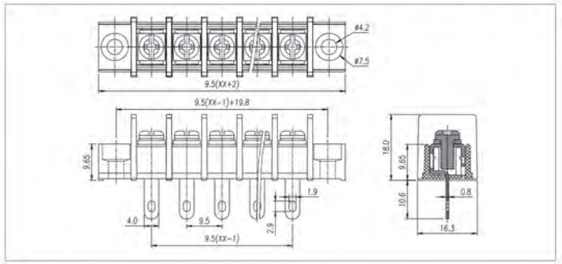

MODEL:JL45RM

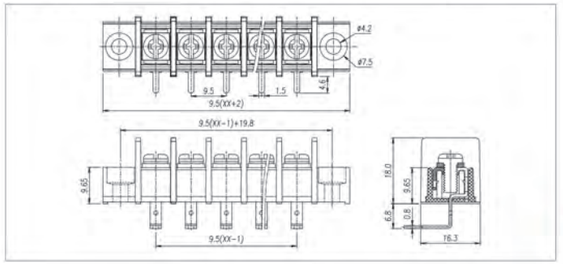

材质及电镀	
螺丝	M4.0, 钢, 镀镍
焊脚	黄铜, 镀锡
塑件	PA66, UL94V-0

电气性能		
参考标准	UL	IEC
额定电压	300V	750V
额定电流	20A	32A
使用线径	22-12AWG	4.0mm²
接触电阻	20mΩ	
绝缘电阻	500MΩ/DC500V	
耐电压	AC2000V/1Min	
温度范围	-40℃~+105℃	
扭矩	12.24kgf-cm/1.2Nm/10.6Lbin	

MATERIAL	
Screws	M4.0 Steel Ni plated
Pin Header	Brass, Sn plated
Housing	PA66, UL94V-0

ELECTRICAL		
Standard	UL	IEC
Rated voltage	300V	750V
Rated current	20A	32A
Wire range	22-12AWG	4.0mm²
Contact Resistance	20mΩ	
Insulation resistance	500MΩ/DC500V	
Withstanding voltage	AC2000V/1Min	
Temp. range	-40℃~+105℃	
Torque	12.24kgf-cm/1.2Nm/10.6Lbin	

材质及电镀	
螺丝	M4.0, 钢, 镀镍
焊脚	黄铜, 镀锡
塑件	PA66, UL94V-0

电气性能		
参考标准	UL	IEC
额定电压	300V	750V
额定电流	20A	32A
使用线径	22-12AWG	4.0mm²
接触电阻	20mΩ	
绝缘电阻	500MΩ/DC500V	
耐电压	AC2000V/1Min	
温度范围	-40℃~+105℃	
扭矩	12.24kgf-cm/1.2Nm/10.6Lbin	

MATERIAL	
Screws	M4.0 Steel Ni plated
Pin Header	Brass, Sn plated
Housing	PA66, UL94V-0

ELECTRICAL		
Standard	UL	IEC
Rated voltage	300V	750V
Rated current	20A	32A
Wire range	22-12AWG	4.0mm²
Contact Resistance	20mΩ	
Insulation resistance	500MΩ/DC500V	
Withstanding voltage	AC2000V/1Min	
Temp. range	-40℃~+105℃	
Torque	12.24kgf-cm/1.2Nm/10.6Lbin	

MODEL:JL55C

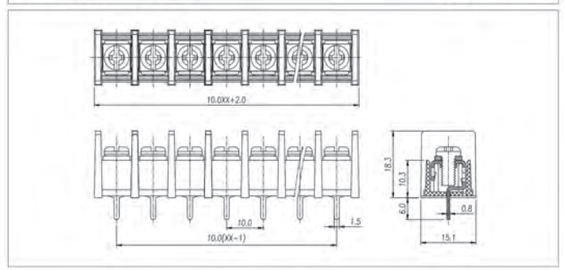

MODEL:JL55S

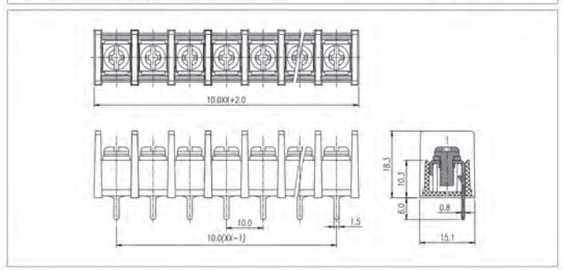

MODEL:JL55CM

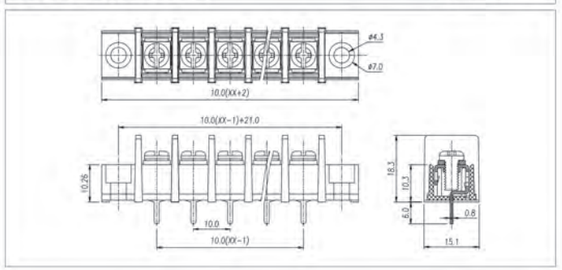

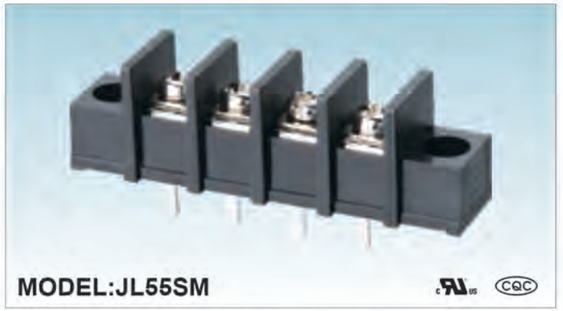

MODEL:JL55SM

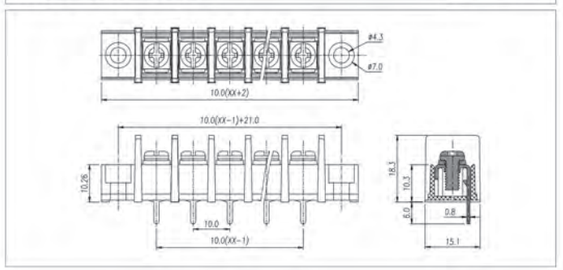

MODEL:JL55H

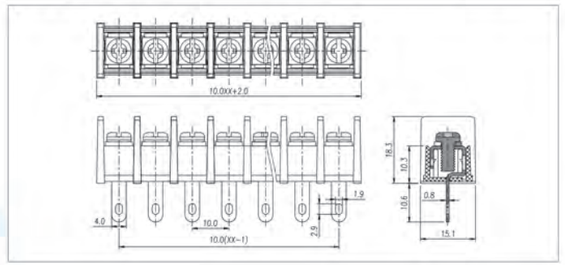

MODEL:JL55R

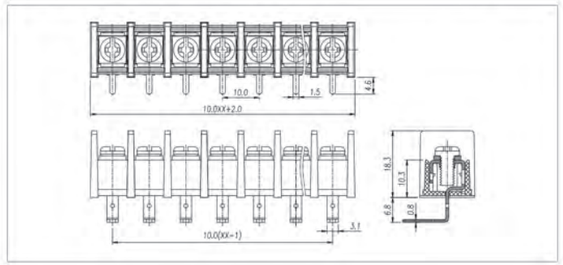

MODEL:JL55HM

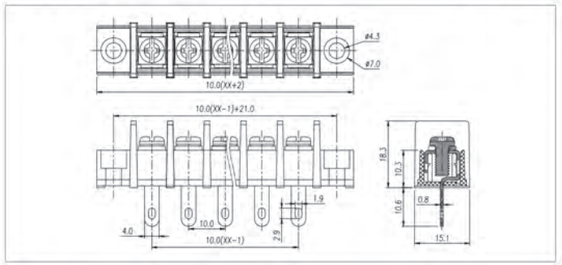

MODEL:JL55RM

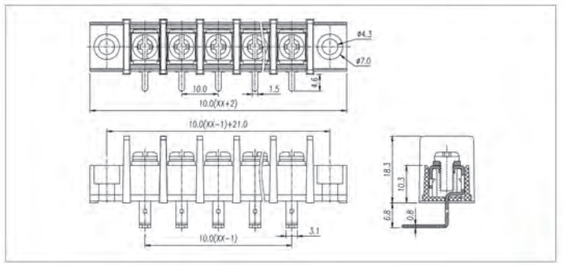

材质及电镀	
螺丝	M4.0, 钢, 镀镍
焊脚	黄铜, 镀锡
塑件	PA66, UL94V-0

电气性能		
参考标准	UL	IEC
额定电压	300V	750V
额定电流	20A	32A
使用线径	22-12AWG	4.0mm²
接触电阻	20mΩ	
绝缘电阻	500MΩ/DC500V	
耐电压	AC2000V/1Min	
温度范围	-40℃~+105℃	
扭矩	12.24kgf-cm/1.2Nm/10.6Lbin	

MATERIAL	
Screws	M4.0 Steel Ni plated
Pin Header	Brass, Sn plated
Housing	PA66, UL94V-0

ELECTRICAL		
Standard	UL	IEC
Rated voltage	300V	750V
Rated current	20A	32A
Wire range	22-12AWG	4.0mm²
Contact Resistance	20mΩ	
Insulation resistance	500MΩ/DC500V	
Withstanding voltage	AC2000V/1Min	
Temp. range	-40℃~+105℃	
Torque	12.24kgf-cm/1.2Nm/10.6Lbin	

材质及电镀	
螺丝	M4.0, 钢, 镀镍
焊脚	黄铜, 镀锡
塑件	PA66, UL94V-0

电气性能		
参考标准	UL	IEC
额定电压	300V	750V
额定电流	20A	32A
使用线径	22-12AWG	4.0mm²
接触电阻	20mΩ	
绝缘电阻	500MΩ/DC500V	
耐电压	AC2000V/1Min	
温度范围	-40℃~+105℃	
扭矩	12.24kgf-cm/1.2Nm/10.6Lbin	

MATERIAL	
Screws	M4.0 Steel Ni plated
Pin Header	Brass, Sn plated
Housing	PA66, UL94V-0

ELECTRICAL		
Standard	UL	IEC
Rated voltage	300V	750V
Rated current	20A	32A
Wire range	22-12AWG	4.0mm²
Contact Resistance	20mΩ	
Insulation resistance	500MΩ/DC500V	
Withstanding voltage	AC2000V/1Min	
Temp. range	-40℃~+105℃	
Torque	12.24kgf-cm/1.2Nm/10.6Lbin	

MODEL:JL65C

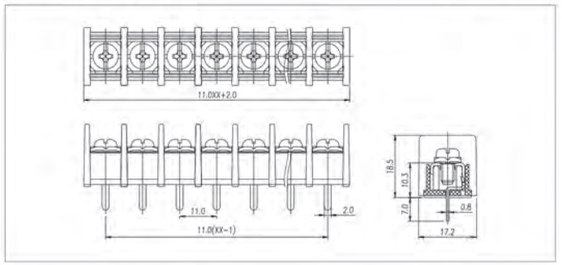

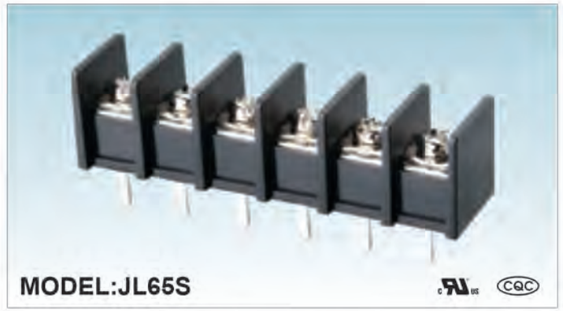

MODEL:JL65S

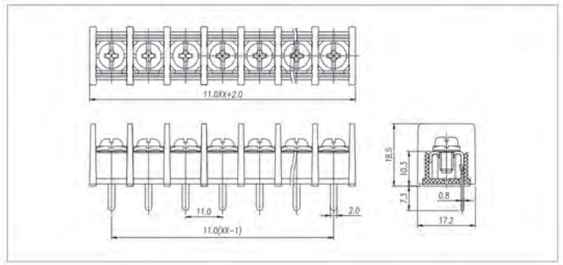

MODEL:JL65CM

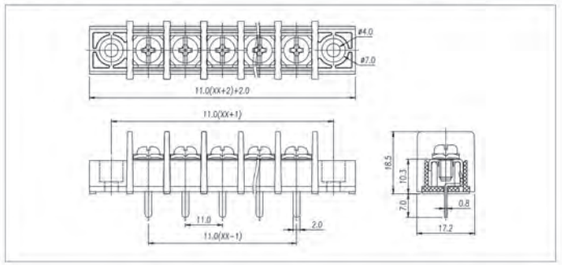

MODEL:JL65SM

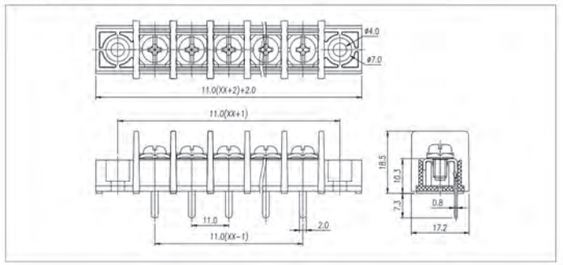

MODEL:JL65H

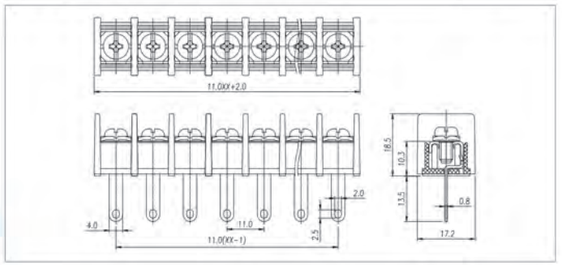

MODEL:JL65R

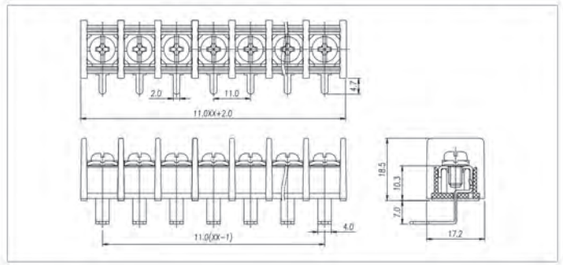

MODEL:JL65HM

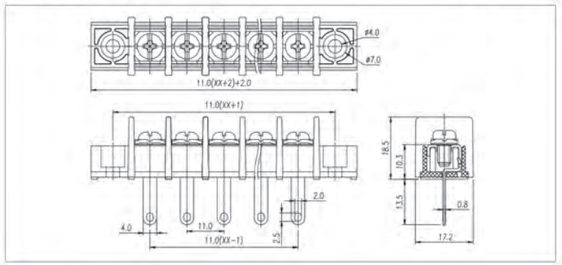

MODEL:JL65RM

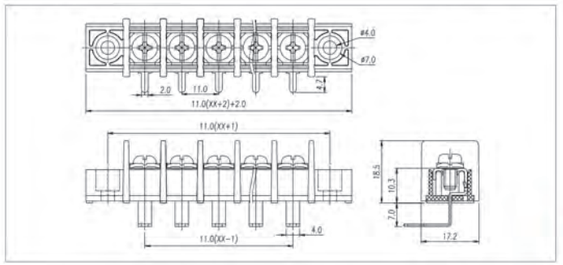

材质及电镀	
螺丝	M4.0, 钢, 镀镍
焊脚	黄铜, 镀锡
塑件	PA66, UL94V-0

电气性能		
参考标准	UL	IEC
额定电压	300V	750V
额定电流	20A	32A
使用线径	22-12AWG	4.0mm²
接触电阻	20mΩ	
绝缘电阻	500MΩ/DC500V	
耐电压	AC2000V/1Min	
温度范围	-40℃~+105℃	
扭矩	12.24kgf-cm/1.2Nm/10.6Lbin	

MATERIAL	
Screws	M4.0 Steel Ni plated
Pin Header	Brass, Sn plated
Housing	PA66, UL94V-0

ELECTRICAL		
Standard	UL	IEC
Rated voltage	300V	750V
Rated current	20A	32A
Wire range	22-12AWG	4.0mm²
Contact Resistance	20mΩ	
Insulation resistance	500MΩ/DC500V	
Withstanding voltage	AC2000V/1Min	
Temp. range	-40℃~+105℃	
Torque	12.24kgf-cm/1.2Nm/10.6Lbin	

材质及电镀	
螺丝	M4.0, 钢, 镀镍
焊脚	黄铜, 镀锡
塑件	PA66, UL94V-0

电气性能		
参考标准	UL	IEC
额定电压	300V	750V
额定电流	20A	32A
使用线径	22-12AWG	4.0mm²
接触电阻	20mΩ	
绝缘电阻	500MΩ/DC500V	
耐电压	AC2000V/1Min	
温度范围	-40℃~+105℃	
扭矩	12.24kgf-cm/1.2Nm/10.6Lbin	

MATERIAL	
Screws	M4.0 Steel Ni plated
Pin Header	Brass, Sn plated
Housing	PA66, UL94V-0

ELECTRICAL		
Standard	UL	IEC
Rated voltage	300V	750V
Rated current	20A	32A
Wire range	22-12AWG	4.0mm²
Contact Resistance	20mΩ	
Insulation resistance	500MΩ/DC500V	
Withstanding voltage	AC2000V/1Min	
Temp. range	-40℃~+105℃	
Torque	12.24kgf-cm/1.2Nm/10.6Lbin	

MODEL:JL28C

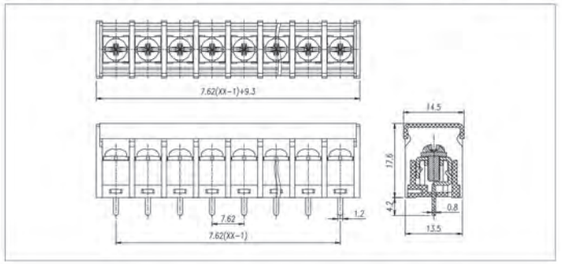

MODEL:JL28S

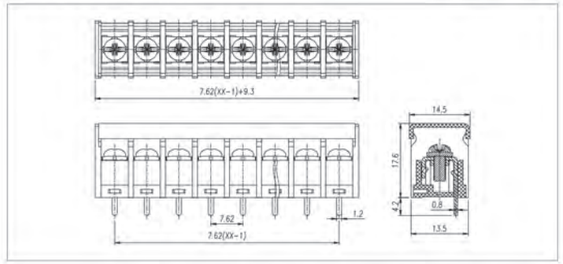

MODEL:JL28CM

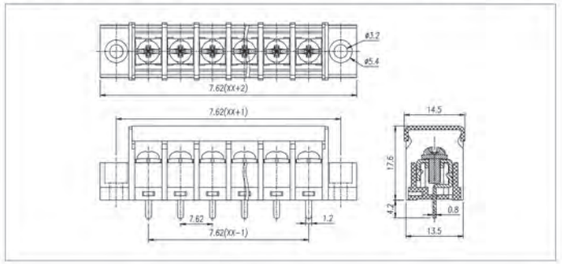

MODEL:JL28SM

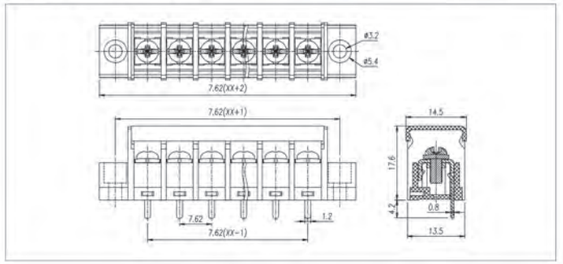

MODEL:JL28H

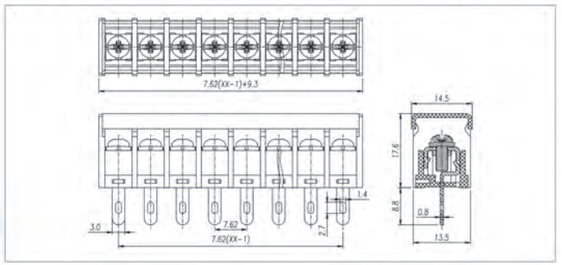

MODEL:JL28R

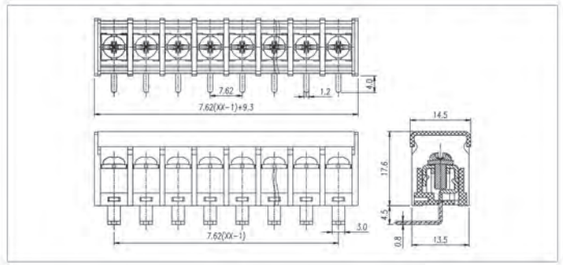

MODEL:JL28HM

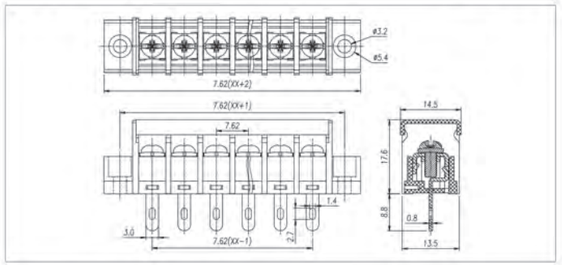

MODEL:JL28RM

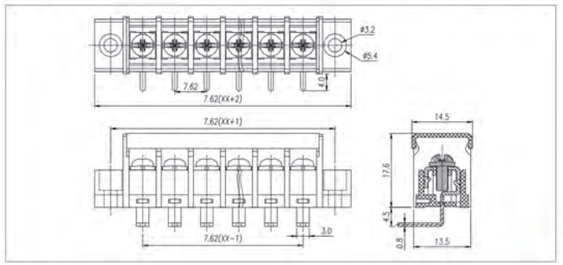

材质及电镀	
螺丝	M3.0, 钢, 镀镍
焊脚	黄铜, 镀锡
塑件	PA66, UL94V-0

电气性能		
参考标准	UL	IEC
额定电压	300V	450V
额定电流	15A	24A
使用线径	22-14AWG	2.5mm²
接触电阻	20mΩ	
绝缘电阻	500MΩ/DC500V	
耐电压	AC2000V/1Min	
温度范围	-40℃~+105℃	
扭矩	5.10kgf-cm/0.5Nm/4.43Lbin	

MATERIAL	
Screws	M3.0 Steel Ni plated
Pin Header	Brass, Sn plated
Housing	PA66, UL94V-0

ELECTRICAL		
Standard	UL	IEC
Rated voltage	300V	450V
Rated current	15A	24A
Wire range	22-14AWG	2.5mm²
Contact Resistance	20mΩ	
Insulation resistance	500MΩ/DC500V	
Withstanding voltage	AC2000V/1Min	
Temp. range	-40℃~+105℃	
Torque	5.10kgf-cm/0.5Nm/4.43Lbin	

材质及电镀	
螺丝	M3.0, 钢, 镀镍
焊脚	黄铜, 镀锡
塑件	PA66, UL94V-0

电气性能		
参考标准	UL	IEC
额定电压	300V	450V
额定电流	15A	24A
使用线径	22-14AWG	2.5mm²
接触电阻	20mΩ	
绝缘电阻	500MΩ/DC500V	
耐电压	AC2000V/1Min	
温度范围	-40℃~+105℃	
扭矩	5.10kgf-cm/0.5Nm/4.43Lbin	

MATERIAL	
Screws	M3.0 Steel Ni plated
Pin Header	Brass, Sn plated
Housing	PA66, UL94V-0

ELECTRICAL		
Standard	UL	IEC
Rated voltage	300V	450V
Rated current	15A	24A
Wire range	22-14AWG	2.5mm²
Contact Resistance	20mΩ	
Insulation resistance	500MΩ/DC500V	
Withstanding voltage	AC2000V/1Min	
Temp. range	-40℃~+105℃	
Torque	5.10kgf-cm/0.5Nm/4.43Lbin	

MODEL:JL38C

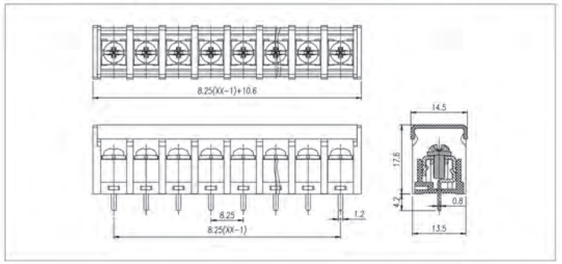

MODEL:JL38S

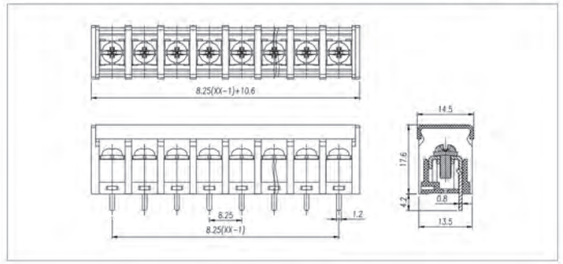

MODEL:JL38CM

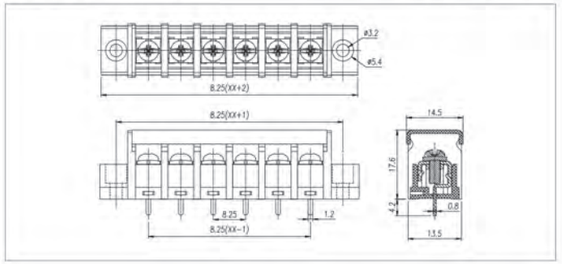

MODEL:JL38SM

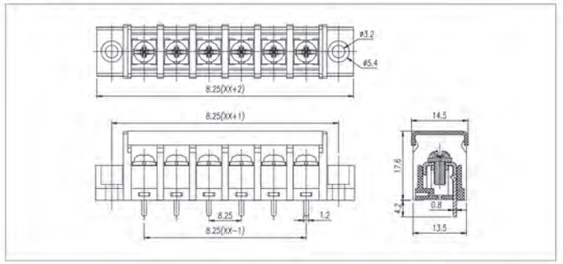

MODEL:JL38H

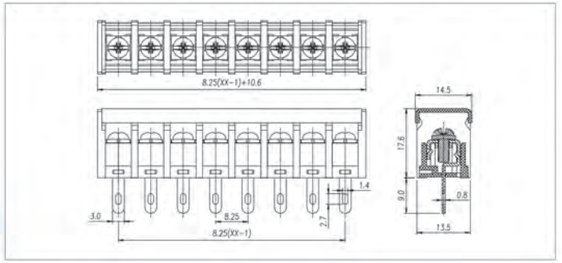

MODEL:JL38R

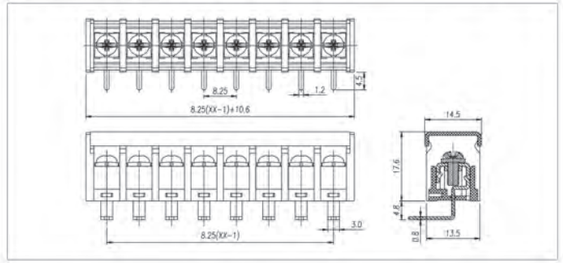

MODEL:JL38HM

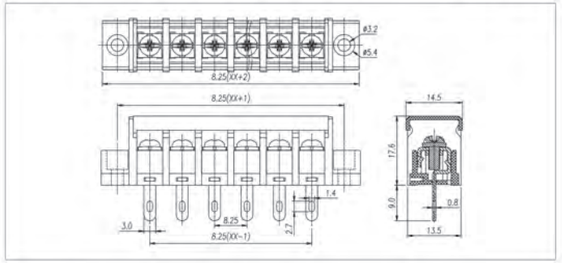

MODEL:JL38RM

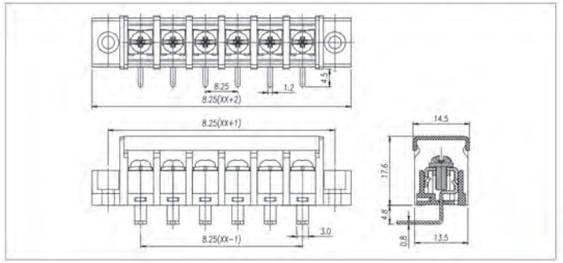

材质及电镀	
螺丝	M3.0, 钢, 镀镍
焊脚	黄铜, 镀锡
塑件	PA66, UL94V-0

电气性能		
参考标准	UL	IEC
额定电压	300V	450V
额定电流	15A	24A
使用线径	22-14AWG	2.5mm²
接触电阻	20mΩ	
绝缘电阻	500MΩ/DC500V	
耐电压	AC2000V/1Min	
温度范围	-40℃~+105℃	
扭矩	5.10kgf-cm/0.5Nm/4.43Lbin	

MATERIAL	
Screws	M3.0 Steel Ni plated
Pin Header	Brass, Sn plated
Housing	PA66, UL94V-0

ELECTRICAL		
Standard	UL	IEC
Rated voltage	300V	450V
Rated current	15A	24A
Wire range	22-14AWG	2.5mm²
Contact Resistance	20mΩ	
Insulation resistance	500MΩ/DC500V	
Withstanding voltage	AC2000V/1Min	
Temp. range	-40℃~+105℃	
Torque	5.10kgf-cm/0.5Nm/4.43Lbin	

材质及电镀	
螺丝	M3.0, 钢, 镀镍
焊脚	黄铜, 镀锡
塑件	PA66, UL94V-0

电气性能		
参考标准	UL	IEC
额定电压	300V	450V
额定电流	15A	24A
使用线径	22-14AWG	2.5mm²
接触电阻	20mΩ	
绝缘电阻	500MΩ/DC500V	
耐电压	AC2000V/1Min	
温度范围	-40℃~+105℃	
扭矩	5.10kgf-cm/0.5Nm/4.43Lbin	

MATERIAL	
Screws	M3.0 Steel Ni plated
Pin Header	Brass, Sn plated
Housing	PA66, UL94V-0

ELECTRICAL		
Standard	UL	IEC
Rated voltage	300V	450V
Rated current	15A	24A
Wire range	22-14AWG	2.5mm²
Contact Resistance	20mΩ	
Insulation resistance	500MΩ/DC500V	
Withstanding voltage	AC2000V/1Min	
Temp. range	-40℃~+105℃	
Torque	5.10kgf-cm/0.5Nm/4.43Lbin	

MODEL:JL48C

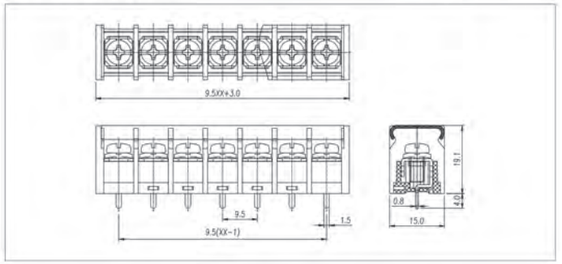

MODEL:JL48S

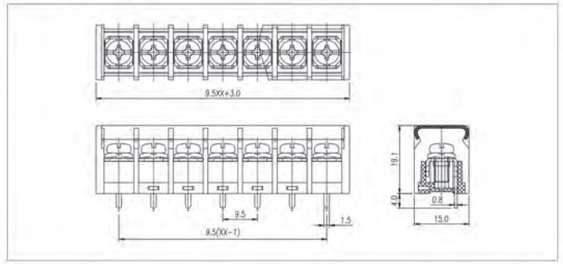

MODEL:JL48CM

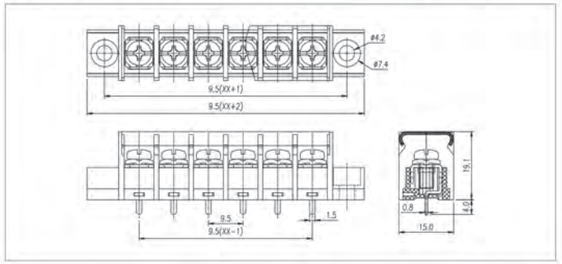

MODEL:JL48SM

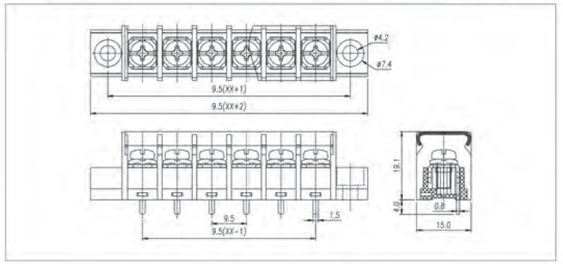

MODEL:JL48H

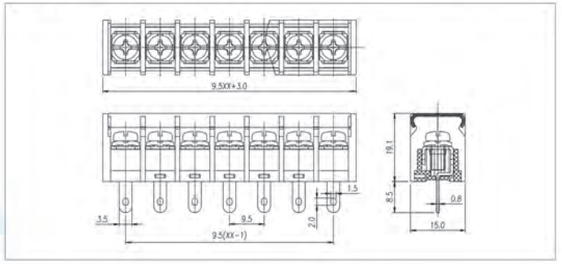

MODEL:JL48R

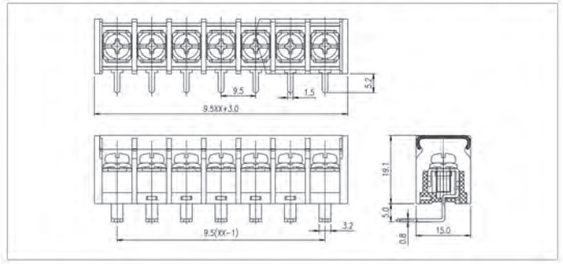

材质及电镀	
螺丝	M4.0, 钢, 镀镍
焊脚	黄铜, 镀锡
塑件	PA66, UL94V-0

电气性能		
参考标准	UL	IEC
额定电压	300V	750V
额定电流	20A	32A
使用线径	22-12AWG	4.0mm²
接触电阻	20mΩ	
绝缘电阻	500MΩ/DC500V	
耐电压	AC2000V/1Min	
温度范围	-40℃~+105℃	
扭矩	12.24kgf-cm/1.2Nm/10.6Lbin	

MATERIAL	
Screws	M4.0 Steel Ni plated
Pin Header	Brass, Sn plated
Housing	PA66, UL94V-0

ELECTRICAL		
Standard	UL	IEC
Rated voltage	300V	750V
Rated current	20A	32A
Wire range	22-12AWG	4.0mm²
Contact Resistance	20mΩ	
Insulation resistance	500MΩ/DC500V	
Withstanding voltage	AC2000V/1Min	
Temp. range	-40℃~+105℃	
Torque	12.24kgf-cm/1.2Nm/10.6Lbin	

MODEL:JL48HM

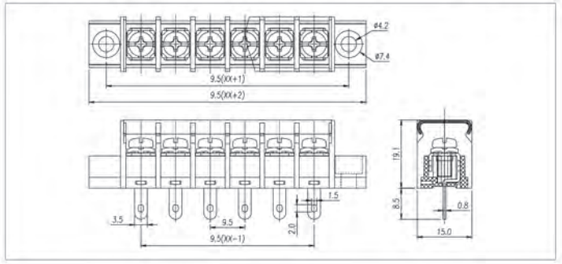

MODEL:JL48RM

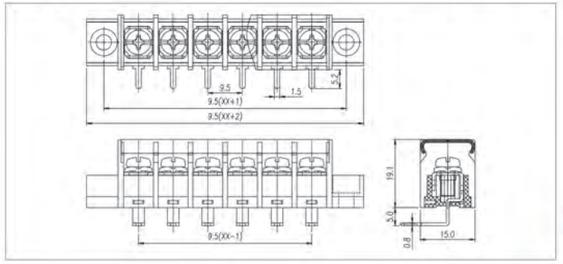

材质及电镀	
螺丝	M4.0, 钢, 镀镍
焊脚	黄铜, 镀锡
塑件	PA66, UL94V-0

电气性能		
参考标准	UL	IEC
额定电压	300V	750V
额定电流	20A	32A
使用线径	22-12AWG	4.0mm²
接触电阻	20mΩ	
绝缘电阻	500MΩ/DC500V	
耐电压	AC2000V/1Min	
温度范围	-40℃~+105℃	
扭矩	12.24kgf-cm/1.2Nm/10.6Lbin	

MATERIAL	
Screws	M4.0 Steel Ni plated
Pin Header	Brass, Sn plated
Housing	PA66, UL94V-0

ELECTRICAL		
Standard	UL	IEC
Rated voltage	300V	750V
Rated current	20A	32A
Wire range	22-12AWG	4.0mm²
Contact Resistance	20mΩ	
Insulation resistance	500MΩ/DC500V	
Withstanding voltage	AC2000V/1Min	
Temp. range	-40℃~+105℃	
Torque	12.24kgf-cm/1.2Nm/10.6Lbin	

MODEL:JL68C

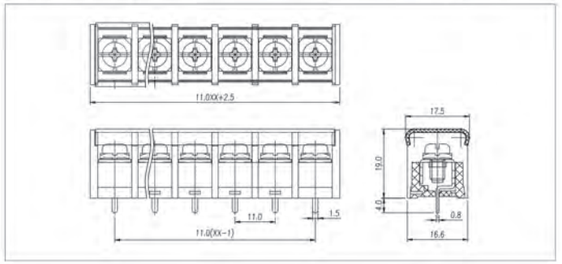

MODEL:JL68S

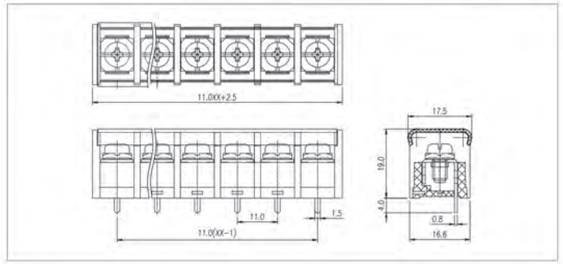

MODEL:JL68CM

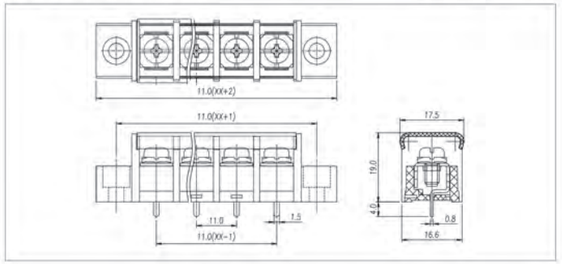

MODEL:JL68SM

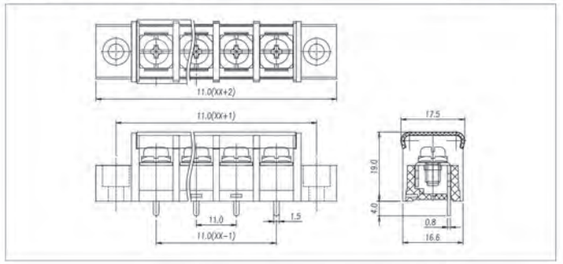

MODEL:JL68H

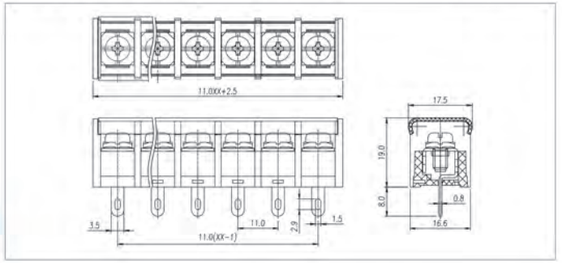

MODEL:JL68R

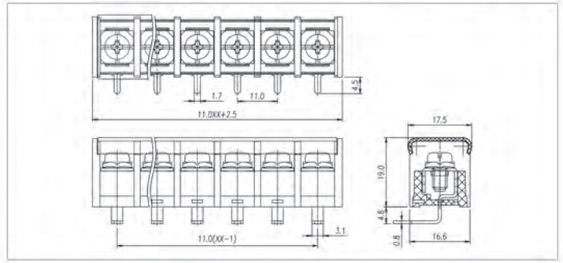

MODEL:JL68HM

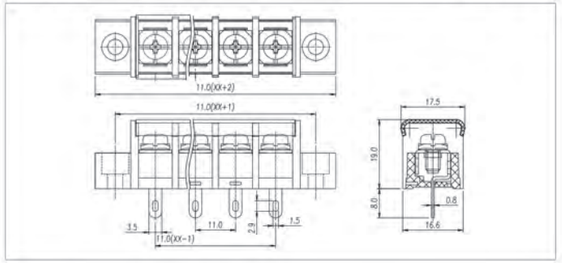

MODEL:JL68RM

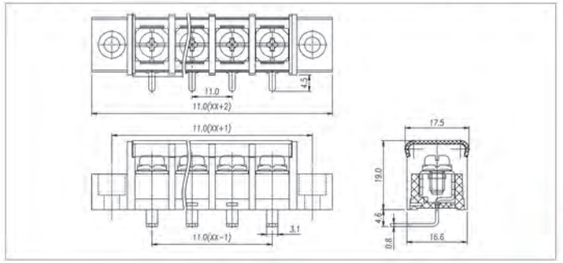

材质及电镀	
螺丝	M4.0, 钢, 镀镍
焊脚	黄铜, 镀锡
塑件	PA66, UL94V-0

电气性能		
参考标准	UL	IEC
额定电压	300V	750V
额定电流	20A	32A
使用线径	22-12AWG	4.0mm²
接触电阻	20mΩ	
绝缘电阻	500MΩ/DC500V	
耐电压	AC2000V/1Min	
温度范围	-40℃~+105℃	
扭矩	12.24kgf-cm/1.2Nm/10.6Lbin	

MATERIAL	
Screws	M4.0 Steel Ni plated
Pin Header	Brass, Sn plated
Housing	PA66, UL94V-0

ELECTRICAL		
Standard	UL	IEC
Rated voltage	300V	750V
Rated current	20A	32A
Wire range	22-12AWG	4.0mm²
Contact Resistance	20mΩ	
Insulation resistance	500MΩ/DC500V	
Withstanding voltage	AC2000V/1Min	
Temp. range	-40℃~+105℃	
Torque	12.24kgf-cm/1.2Nm/10.6Lbin	

材质及电镀	
螺丝	M4.0, 钢, 镀镍
焊脚	黄铜, 镀锡
塑件	PA66, UL94V-0

电气性能		
参考标准	UL	IEC
额定电压	300V	750V
额定电流	20A	32A
使用线径	22-12AWG	4.0mm²
接触电阻	20mΩ	
绝缘电阻	500MΩ/DC500V	
耐电压	AC2000V/1Min	
温度范围	-40℃~+105℃	
扭矩	12.24kgf-cm/1.2Nm/10.6Lbin	

MATERIAL	
Screws	M4.0 Steel Ni plated
Pin Header	Brass, Sn plated
Housing	PA66, UL94V-0

ELECTRICAL		
Standard	UL	IEC
Rated voltage	300V	750V
Rated current	20A	32A
Wire range	22-12AWG	4.0mm²
Contact Resistance	20mΩ	
Insulation resistance	500MΩ/DC500V	
Withstanding voltage	AC2000V/1Min	
Temp. range	-40℃~+105℃	
Torque	12.24kgf-cm/1.2Nm/10.6Lbin	

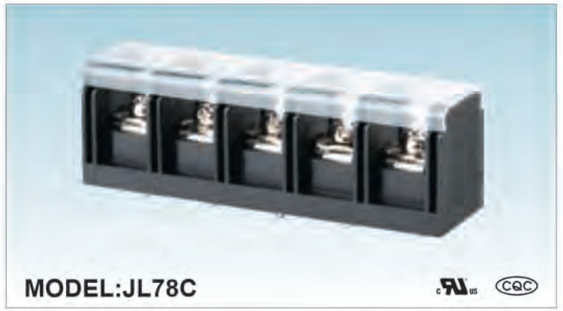

MODEL:JL78C

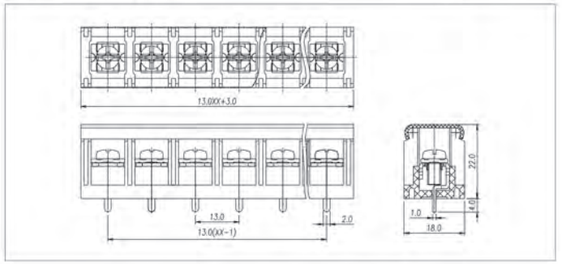

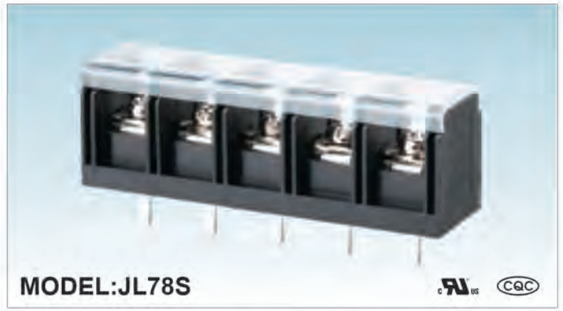

MODEL:JL78S

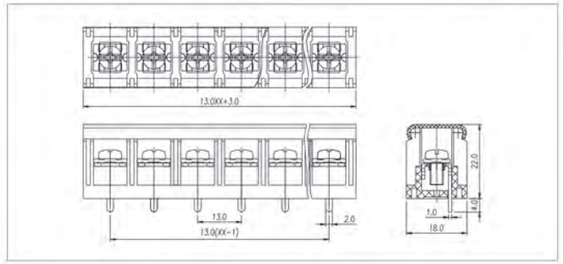

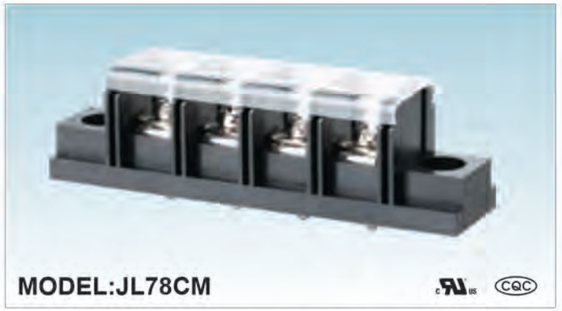

MODEL:JL78CM

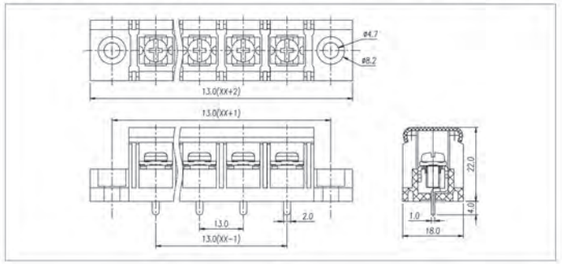

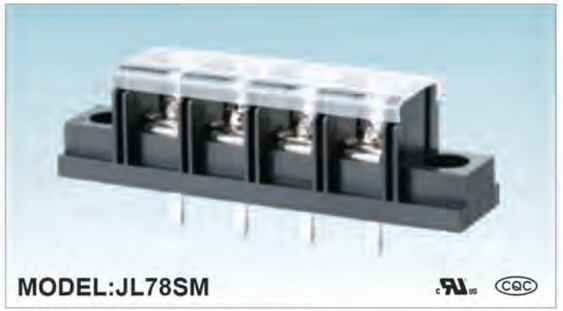

MODEL:JL78SM

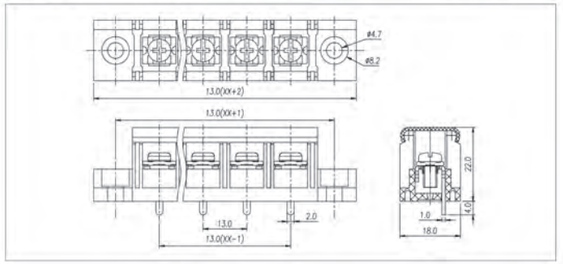

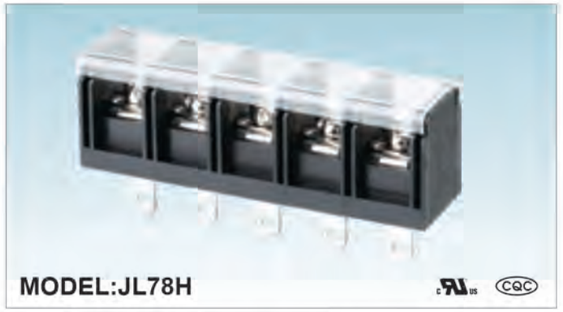

MODEL:JL78H

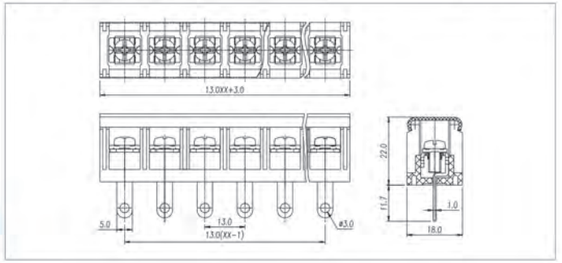

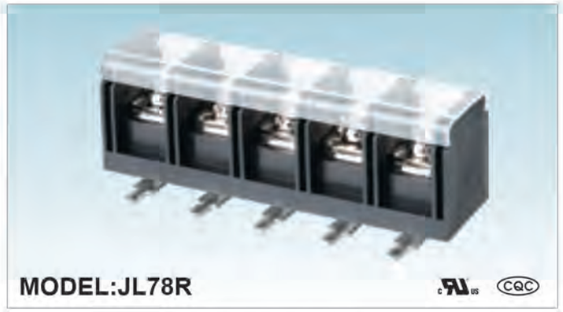

MODEL:JL78R

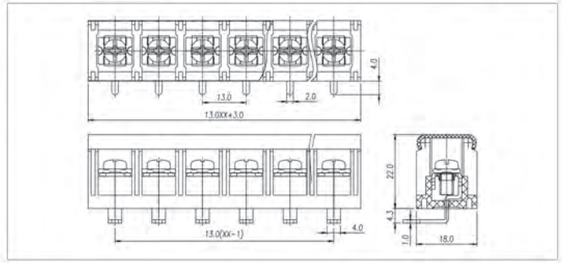

MODEL:JL78HM

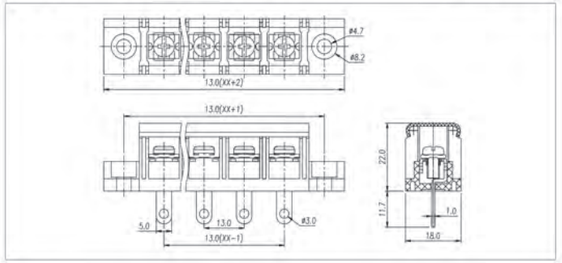

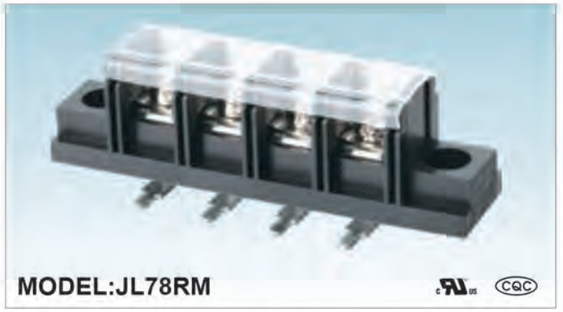

MODEL:JL78RM

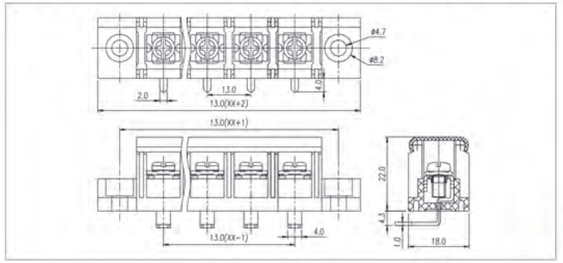

材质及电镀	
螺丝	M4.0, 钢, 镀镍
焊脚	黄铜, 镀锡
塑件	PA66, UL94V-0

电气性能		
参考标准	UL	IEC
额定电压	600V	750V
额定电流	40A	41A
使用线径	18-10AWG	6.0mm²
接触电阻	20mΩ	
绝缘电阻	500MΩ/DC500V	
耐电压	AC2000V/1Min	
温度范围	-40℃~+105℃	
扭矩	12.24kgf-cm/1.2Nm/10.6Lbin	

MATERIAL	
Screws	M4.0 Steel Ni plated
Pin Header	Brass, Sn plated
Housing	PA66, UL94V-0

ELECTRICAL		
Standard	UL	IEC
Rated voltage	600V	750V
Rated current	40A	41A
Wire range	18-10AWG	6.0mm²
Contact Resistance	20mΩ	
Insulation resistance	500MΩ/DC500V	
Withstanding voltage	AC2000V/1Min	
Temp. range	-40℃~+105℃	
Torque	12.24kgf-cm/1.2Nm/10.6Lbin	

材质及电镀	
螺丝	M4.0, 钢, 镀镍
焊脚	黄铜, 镀锡
塑件	PA66, UL94V-0

电气性能		
参考标准	UL	IEC
额定电压	600V	750V
额定电流	40A	41A
使用线径	18-10AWG	6.0mm²
接触电阻	20mΩ	
绝缘电阻	500MΩ/DC500V	
耐电压	AC2000V/1Min	
温度范围	-40℃~+105℃	
扭矩	12.24kgf-cm/1.2Nm/10.6Lbin	

MATERIAL	
Screws	M4.0 Steel Ni plated
Pin Header	Brass, Sn plated
Housing	PA66, UL94V-0

ELECTRICAL		
Standard	UL	IEC
Rated voltage	600V	750V
Rated current	40A	41A
Wire range	18-10AWG	6.0mm²
Contact Resistance	20mΩ	
Insulation resistance	500MΩ/DC500V	
Withstanding voltage	AC2000V/1Min	
Temp. range	-40℃~+105℃	
Torque	12.24kgf-cm/1.2Nm/10.6Lbin	

MODEL:JL06

认证/CERTIFICATION		
材质及电镀		
螺丝	M3.0, 钢 镀镍	
焊脚	黄铜, 镀锡	
塑件	PA66, UL94V-0	
电气性能		
参考标准	UL	IEC
额定电压	300V	250V
额定电流	15A	24A
使用线径	22-14AWG	2.5mm²
接触电阻	20mΩ	
绝缘电阻	500MΩ/DC500V	
耐电压	AC2000V/1Min	
机械性能		
温度范围	-40℃~+105℃	
扭矩	5.1kgf-cm/0.5Nm/4.43Lbin	

MATERIAL		
Screws	M3.0 Steel Ni plated	
Pin Herder	Brass, Sn plated	
Housing	PA66, UL94V-0	
ELECTRICAL		
Standard	UL	IEC
Rated voltage	300V	250V
Rated current	15A	24A
Wire range	22-14AWG	2.5mm²
Contact Resistance	20mΩ	
Insulation resistance	500MΩ/DC500V	
Withstanding voltage	AC2000V/1Min	
MECHANICAL		
Temp. range	-40℃~+105℃	
Torque	5.1kgf-cm/0.5Nm/4.43Lbin	

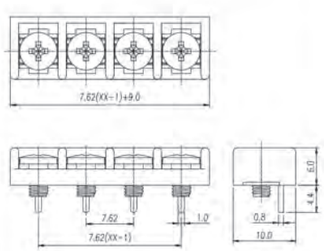

MODEL:JL16

认证/CERTIFICATION		
材质及电镀		
螺丝	M3.0, 钢 镀镍	
焊脚	黄铜, 镀锡	
塑件	PA66, UL94V-0	
电气性能		
参考标准	UL	IEC
额定电压	300V	250V
额定电流	10A	17.5A
使用线径	22-16AWG	1.5mm²
接触电阻	20mΩ	
绝缘电阻	500MΩ/DC500V	
耐电压	AC2000V/1Min	
机械性能		
温度范围	-40℃~+105℃	
扭矩	5.1kgf-cm/0.5Nm/4.43Lbin	

MATERIAL		
Screws	M3.0 Steel Ni plated	
Pin Herder	Brass, Sn plated	
Housing	PA66, UL94V-0	
ELECTRICAL		
Standard	UL	IEC
Rated voltage	300V	250V
Rated current	10A	17.5A
Wire range	22-16AWG	1.5mm²
Contact Resistance	20mΩ	
Insulation resistance	500MΩ/DC500V	
Withstanding voltage	AC2000V/1Min	
MECHANICAL		
Temp. range	-40℃~+105℃	
Torque	5.1kgf-cm/0.5Nm/4.43Lbin	

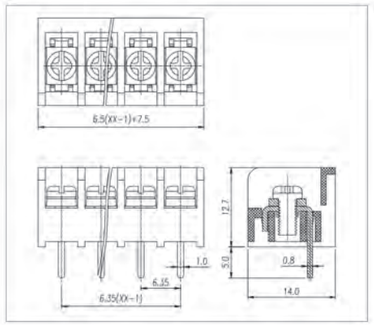

MODEL:JL16A

认证/CERTIFICATION		
材质及电镀		
螺丝	M3.0, 钢 镀镍	
焊脚	黄铜, 镀锡	
塑件	PA66, UL94V-0	
电气性能		
参考标准	UL	IEC
额定电压	300V	250V
额定电流	10A	17.5A
使用线径	22-16AWG	1.5mm²
接触电阻	20mΩ	
绝缘电阻	500MΩ/DC500V	
耐电压	AC2000V/1Min	
机械性能		
温度范围	-40℃~+105℃	
扭矩	5.1kgf-cm/0.5Nm/4.43Lbin	

MATERIAL		
Screws	M3.0 Steel Ni plated	
Pin Herder	Brass, Sn plated	
Housing	PA66, UL94V-0	
ELECTRICAL		
Standard	UL	IEC
Rated voltage	300V	250V
Rated current	10A	17.5A
Wire range	22-16AWG	1.5mm²
Contact Resistance	20mΩ	
Insulation resistance	500MΩ/DC500V	
Withstanding voltage	AC2000V/1Min	
MECHANICAL		
Temp. range	-40℃~+105℃	
Torque	5.1kgf-cm/0.5Nm/4.43Lbin	

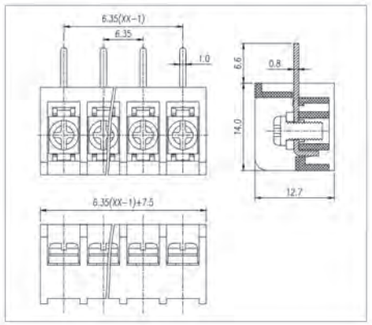

MODEL:JL16R

认证/CERTIFICATION		
材质及电镀		
螺丝	M3.0, 钢 镀镍	
焊脚	黄铜, 镀锡	
塑件	PA66, UL94V-0	
电气性能		
参考标准	UL	IEC
额定电压	300V	250V
额定电流	10A	17.5A
使用线径	22-16AWG	1.5mm²
接触电阻	20mΩ	
绝缘电阻	500MΩ/DC500V	
耐电压	AC2000V/1Min	
机械性能		
温度范围	-40℃~+105℃	
扭矩	5.1kgf-cm/0.5Nm/4.43Lbin	

MATERIAL		
Screws	M3.0 Steel Ni plated	
Pin Herder	Brass, Sn plated	
Housing	PA66, UL94V-0	
ELECTRICAL		
Standard	UL	IEC
Rated voltage	300V	250V
Rated current	10A	17.5A
Wire range	22-16AWG	1.5mm²
Contact Resistance	20mΩ	
Insulation resistance	500MΩ/DC500V	
Withstanding voltage	AC2000V/1Min	
MECHANICAL		
Temp. range	-40℃~+105℃	
Torque	5.1kgf-cm/0.5Nm/4.43Lbin	

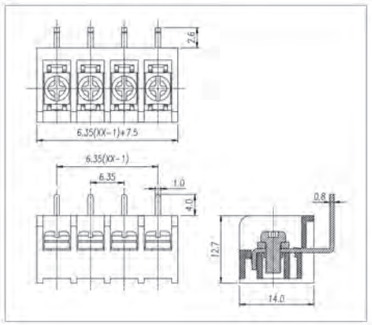

MODEL:JL26(HB8500)

认证/CERTIFICATION		
材质及电镀		
螺丝	M3.0, 钢 镀镍	
焊脚	黄铜, 镀锡	
塑件	PA66, UL94V-0	
电气性能		
参考标准	UL	IEC
额定电压	300V	450V
额定电流	20A	24A
使用线径	22-12AWG	4.0mm²
接触电阻	20mΩ	
绝缘电阻	500MΩ/DC500V	
耐电压	AC2000V/1Min	
机械性能		
温度范围	-40℃~+105℃	
扭矩	5.1kgf-cm/0.5Nm/4.43Lbin	

MATERIAL		
Screws	M3.0 Steel Ni plated	
Pin Herder	Brass, Sn plated	
Housing	PA66, UL94V-0	
ELECTRICAL		
Standard	UL	IEC
Rated voltage	300V	450V
Rated current	20A	24A
Wire range	22-12AWG	4.0mm²
Contact Resistance	20mΩ	
Insulation resistance	500MΩ/DC500V	
Withstanding voltage	AC2000V/1Min	
MECHANICAL		
Temp. range	-40℃~+105℃	
Torque	5.1kgf-cm/0.5Nm/4.43Lbin	

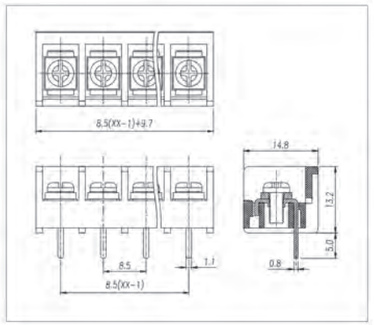

MODEL:JL36

认证/CERTIFICATION		
材质及电镀		
螺丝	M3.0, 钢 镀镍	
焊脚	黄铜, 镀锡	
塑件	PA66, UL94V-0	
电气性能		
参考标准	UL	IEC
额定电压	300V	450V
额定电流	20A	24A
使用线径	22-12AWG	4.0mm²
接触电阻	20mΩ	
绝缘电阻	500MΩ/DC500V	
耐电压	AC2000V/1Min	
机械性能		
温度范围	-40℃~+105℃	
扭矩	5.1kgf-cm/0.5Nm/4.43Lbin	

MATERIAL		
Screws	M3.0 Steel Ni plated	
Pin Herder	Brass, Sn plated	
Housing	PA66, UL94V-0	
ELECTRICAL		
Standard	UL	IEC
Rated voltage	300V	450V
Rated current	20A	24A
Wire range	22-12AWG	4.0mm²
Contact Resistance	20mΩ	
Insulation resistance	500MΩ/DC500V	
Withstanding voltage	AC2000V/1Min	
MECHANICAL		
Temp. range	-40℃~+105℃	
Torque	5.1kgf-cm/0.5Nm/4.43Lbin	

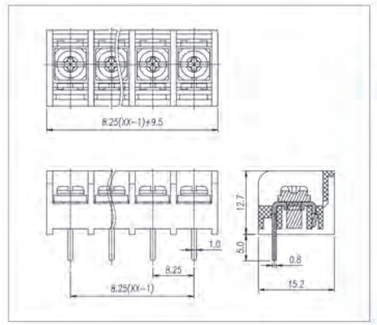

MODEL:JL36A

认证/CERTIFICATION		
材质及电镀		
螺丝	M3.0, 钢 镀镍	
焊脚	黄铜, 镀锡	
塑件	PA66, UL94V-0	
电气性能		
参考标准	UL	IEC
额定电压	300V	450V
额定电流	20A	24A
使用线径	22-12AWG	4.0mm²
接触电阻	20mΩ	
绝缘电阻	500MΩ/DC500V	
耐电压	AC2000V/1Min	
机械性能		
温度范围	-40℃~+105℃	
扭矩	5.1kgf-cm/0.5Nm/4.43Lbin	

MATERIAL		
Screws	M3.0 Steel Ni plated	
Pin Herder	Brass, Sn plated	
Housing	PA66, UL94V-0	
ELECTRICAL		
Standard	UL	IEC
Rated voltage	300V	450V
Rated current	20A	24A
Wire range	22-12AWG	4.0mm²
Contact Resistance	20mΩ	
Insulation resistance	500MΩ/DC500V	
Withstanding voltage	AC2000V/1Min	
MECHANICAL		
Temp. range	-40℃~+105℃	
Torque	5.1kgf-cm/0.5Nm/4.43Lbin	

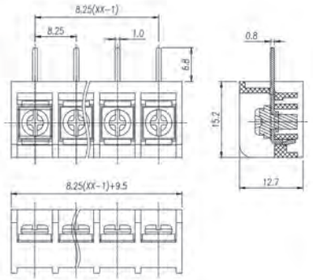

MODEL:JL825

认证/CERTIFICATION		
材质及电镀		
螺丝	M3.0, 钢 镀镍	
焊脚	黄铜, 镀锡	
塑件	PA66, UL94V-0	
电气性能		
参考标准	UL	IEC
额定电压	300V	450V
额定电流	20A	24A
使用线径	22-12AWG	4.0mm²
接触电阻	20mΩ	
绝缘电阻	500MΩ/DC500V	
耐电压	AC2000V/1Min	
机械性能		
温度范围	-40℃~+105℃	
扭矩	5.1kgf-cm/0.5Nm/4.43Lbin	

MATERIAL		
Screws	M3.0 Steel Ni plated	
Pin Herder	Brass, Sn plated	
Housing	PA66, UL94V-0	
ELECTRICAL		
Standard	UL	IEC
Rated voltage	300V	450V
Rated current	20A	24A
Wire range	22-12AWG	4.0mm²
Contact Resistance	20mΩ	
Insulation resistance	500MΩ/DC500V	
Withstanding voltage	AC2000V/1Min	
MECHANICAL		
Temp. range	-40℃~+105℃	
Torque	5.1kgf-cm/0.5Nm/4.43Lbin	

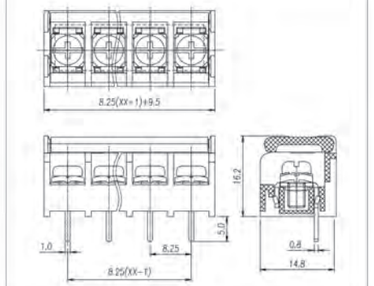

MODEL:HB9500

认证/CERTIFICATION		
材质及电镀		
螺丝	M4.0, 钢 镀镍	
焊脚	黄铜, 镀锡	
塑件	PA66, UL94V-0	
电气性能		
参考标准	UL	IEC
额定电压	300V	750V
额定电流	20A	32A
使用线径	22-12AWG	4.0mm²
接触电阻	20mΩ	
绝缘电阻	500MΩ/DC500V	
耐电压	AC2000V/1Min	
机械性能		
温度范围	-40℃~+105℃	
扭矩	12.24kgf-cm/1.2Nm/10.6Lbin	

MATERIAL		
Screws	M4.0 Steel Ni plated	
Pin Herder	Brass, Sn plated	
Housing	PA66, UL94V-0	
ELECTRICAL		
Standard	UL	IEC
Rated voltage	300V	750V
Rated current	20A	32A
Wire range	22-12AWG	4.0mm²
Contact Resistance	20mΩ	
Insulation resistance	500MΩ/DC500V	
Withstanding voltage	AC2000V/1Min	
MECHANICAL		
Temp. range	-40℃~+105℃	
Torque	12.24kgf-cm/1.2Nm/10.6Lbin	

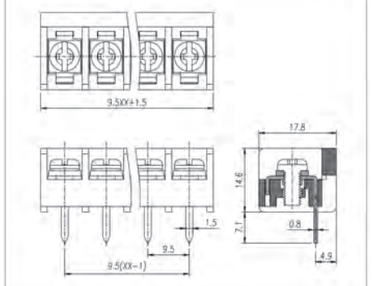

MODEL:JL46A

认证/CERTIFICATION		
材质及电镀		
螺丝	M4.0, 钢 镀镍	
焊脚	黄铜, 镀锡	
塑件	PA66, UL94V-0	
电气性能		
参考标准	UL	IEC
额定电压	300V	750V
额定电流	20A	32A
使用线径	22-12AWG	4.0mm²
接触电阻	20mΩ	
绝缘电阻	500MΩ/DC500V	
耐电压	AC2000V/1Min	
机械性能		
温度范围	-40℃~+105℃	
扭矩	12.24kgf-cm/1.2Nm/10.6Lbin	

MATERIAL		
Screws	M4.0 Steel Ni plated	
Pin Herder	Brass, Sn plated	
Housing	PA66, UL94V-0	
ELECTRICAL		
Standard	UL	IEC
Rated voltage	300V	750V
Rated current	20A	32A
Wire range	22-12AWG	4.0mm²
Contact Resistance	20mΩ	
Insulation resistance	500MΩ/DC500V	
Withstanding voltage	AC2000V/1Min	
MECHANICAL		
Temp. range	-40℃~+105℃	
Torque	12.24kgf-cm/1.2Nm/10.6Lbin	

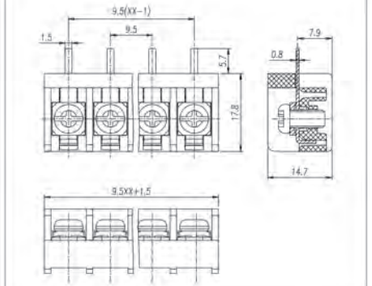

MODEL:JL46G

认证/CERTIFICATION		
材质及电镀		
螺丝	M4.0, 钢 镀镍	
焊脚	黄铜, 镀锡	
塑件	PA66, UL94V-0	
电气性能		
参考标准	UL	IEC
额定电压	300V	750V
额定电流	20A	32A
使用线径	22-12AWG	4.0mm²
接触电阻	20mΩ	
绝缘电阻	500MΩ/DC500V	
耐电压	AC2000V/1Min	
机械性能		
温度范围	-40℃~+105℃	
扭矩	12.24kgf-cm/1.2Nm/10.6Lbin	

MATERIAL		
Screws	M4.0 Steel Ni plated	
Pin Herder	Brass, Sn plated	
Housing	PA66, UL94V-0	
ELECTRICAL		
Standard	UL	IEC
Rated voltage	300V	750V
Rated current	20A	32A
Wire range	22-12AWG	4.0mm²
Contact Resistance	20mΩ	
Insulation resistance	500MΩ/DC500V	
Withstanding voltage	AC2000V/1Min	
MECHANICAL		
Temp. range	-40℃~+105℃	
Torque	12.24kgf-cm/1.2Nm/10.6Lbin	

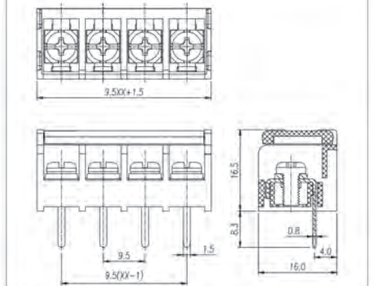

MODEL:JL46GA

认证/CERTIFICATION		
材质及电镀		
螺丝	M4.0, 钢 镀镍	
焊脚	黄铜, 镀锡	
塑件	PA66, UL94V-0	
电气性能		
参考标准	UL	IEC
额定电压	300V	750V
额定电流	20A	32A
使用线径	22-12AWG	4.0mm²
接触电阻	20mΩ	
绝缘电阻	500MΩ/DC500V	
耐电压	AC2000V/1Min	
机械性能		
温度范围	-40℃~+105℃	
扭矩	12.24kgf-cm/1.2Nm/10.6Lbin	

MATERIAL		
Screws	M4.0 Steel Ni plated	
Pin Herder	Brass, Sn plated	
Housing	PA66, UL94V-0	
ELECTRICAL		
Standard	UL	IEC
Rated voltage	300V	750V
Rated current	20A	32A
Wire range	22-12AWG	4.0mm²
Contact Resistance	20mΩ	
Insulation resistance	500MΩ/DC500V	
Withstanding voltage	AC2000V/1Min	
MECHANICAL		
Temp. range	-40℃~+105℃	
Torque	12.24kgf-cm/1.2Nm/10.6Lbin	

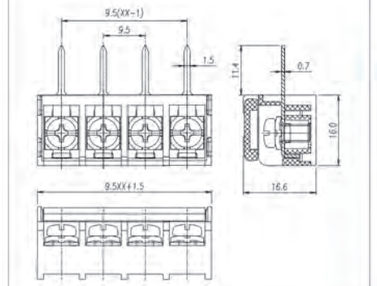

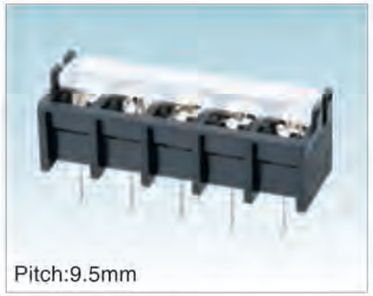

MODEL:JL46GX

认证/CERTIFICATION		
材质及电镀		
螺丝	M4.0, 钢 镀镍	
焊脚	黄铜, 镀锡	
塑件	PA66, UL94V-0	
电气性能		
参考标准	UL	IEC
额定电压	300V	750V
额定电流	20A	32A
使用线径	22-12AWG	4.0mm²
接触电阻	20mΩ	
绝缘电阻	500MΩ/DC500V	
耐电压	AC2000V/1Min	
机械性能		
温度范围	-40℃~+105℃	
扭矩	12.24kgf-cm/1.2Nm/10.6Lbin	

MATERIAL		
Screws	M4.0 Steel Ni plated	
Pin Herder	Brass, Sn plated	
Housing	PA66, UL94V-0	
ELECTRICAL		
Standard	UL	IEC
Rated voltage	300V	750V
Rated current	20A	32A
Wire range	22-12AWG	4.0mm²
Contact Resistance	20mΩ	
Insulation resistance	500MΩ/DC500V	
Withstanding voltage	AC2000V/1Min	
MECHANICAL		
Temp. range	-40℃~+105℃	
Torque	12.24kgf-cm/1.2Nm/10.6Lbin	

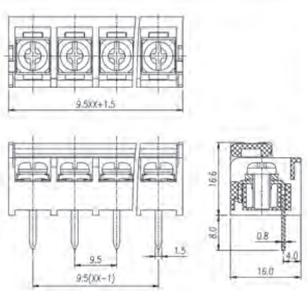

MODEL:JL66

认证/CERTIFICATION		
材质及电镀		
螺丝	M4.0, 钢 镀镍	
焊脚	黄铜, 镀锡	
塑件	PA66, UL94V-0	
电气性能		
参考标准	UL	IEC
额定电压	300V	750V
额定电流	30A	32A
使用线径	22-10AWG	4.0mm²
接触电阻	20mΩ	
绝缘电阻	500MΩ/DC500V	
耐电压	AC2000V/1Min	
机械性能		
温度范围	-40℃~+105℃	
扭矩	12.24kgf-cm/1.2Nm/10.6Lbin	

MATERIAL		
Screws	M4.0 Steel Ni plated	
Pin Herder	Brass, Sn plated	
Housing	PA66, UL94V-0	
ELECTRICAL		
Standard	UL	IEC
Rated voltage	300V	750V
Rated current	30A	32A
Wire range	22-10AWG	4.0mm²
Contact Resistance	20mΩ	
Insulation resistance	500MΩ/DC500V	
Withstanding voltage	AC2000V/1Min	
MECHANICAL		
Temp. range	-40℃~+105℃	
Torque	12.24kgf-cm/1.2Nm/10.6Lbin	

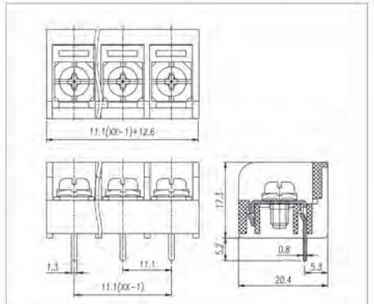

MODEL:JL66A

认证/CERTIFICATION		
材质及电镀		
螺丝	M4.0, 钢 镀镍	
焊脚	黄铜, 镀锡	
塑件	PA66, UL94V-0	
电气性能		
参考标准	UL	IEC
额定电压	300V	750V
额定电流	30A	32A
使用线径	22-10AWG	4.0mm²
接触电阻	20mΩ	
绝缘电阻	500MΩ/DC500V	
耐电压	AC2000V/1Min	
机械性能		
温度范围	-40℃~+105℃	
扭矩	12.24kgf-cm/1.2Nm/10.6Lbin	

MATERIAL		
Screws	M4.0 Steel Ni plated	
Pin Herder	Brass, Sn plated	
Housing	PA66, UL94V-0	
ELECTRICAL		
Standard	UL	IEC
Rated voltage	300V	750V
Rated current	30A	32A
Wire range	22-10AWG	4.0mm²
Contact Resistance	20mΩ	
Insulation resistance	500MΩ/DC500V	
Withstanding voltage	AC2000V/1Min	
MECHANICAL		
Temp. range	-40℃~+105℃	
Torque	12.24kgf-cm/1.2Nm/10.6Lbin	

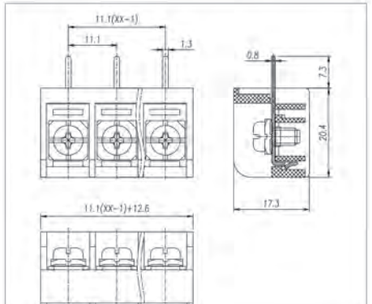

MODEL:JL31

认证/CERTIFICATION		
材质及电镀		
螺丝	M3.0, 钢 镀镍	
焊脚	黄铜, 镀锡	
塑件	PA66, UL94V-0	
电气性能		
参考标准	UL	IEC
额定电压	300V	450V
额定电流	15A	24A
使用线径	22-14AWG	2.5mm²
接触电阻	20mΩ	
绝缘电阻	500MΩ/DC500V	
耐电压	AC2000V/1Min	
机械性能		
温度范围	-40℃~+105℃	
扭矩	5.10kgf-cm/0.5Nm/4.43Lbin	

MATERIAL		
Screws	M3.0 Steel Ni plated	
Pin Herder	Brass, Sn plated	
Housing	PA66, UL94V-0	
ELECTRICAL		
Standard	UL	IEC
Rated voltage	300V	450V
Rated current	15A	24A
Wire range	22-14AWG	2.5mm²
Contact Resistance	20mΩ	
Insulation resistance	500MΩ/DC500V	
Withstanding voltage	AC2000V/1Min	
MECHANICAL		
Temp. range	-40℃~+105℃	
Torque	5.10kgf-cm/0.5Nm/4.43Lbin	

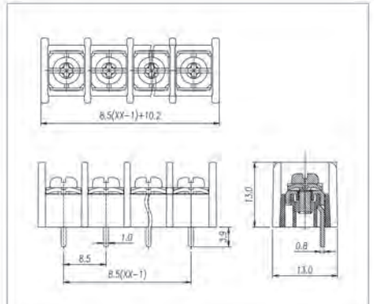

MODEL:JL32

认证/CERTIFICATION		
材质及电镀		
螺丝	M3.0, 钢 镀镍	
焊脚	黄铜, 镀锡	
塑件	PA66, UL94V-0	
电气性能		
参考标准	UL	IEC
额定电压	300V	450V
额定电流	15A	24A
使用线径	22-14AWG	2.5mm²
接触电阻	20mΩ	
绝缘电阻	500MΩ/DC500V	
耐电压	AC2000V/1Min	
机械性能		
温度范围	-40℃~+105℃	
扭矩	5.10kgf-cm/0.5Nm/4.43Lbin	

MATERIAL		
Screws	M3.0 Steel Ni plated	
Pin Herder	Brass, Sn plated	
Housing	PA66, UL94V-0	
ELECTRICAL		
Standard	UL	IEC
Rated voltage	300V	450V
Rated current	15A	24A
Wire range	22-14AWG	2.5mm²
Contact Resistance	20mΩ	
Insulation resistance	500MΩ/DC500V	
Withstanding voltage	AC2000V/1Min	
MECHANICAL		
Temp. range	-40℃~+105℃	
Torque	5.10kgf-cm/0.5Nm/4.43Lbin	

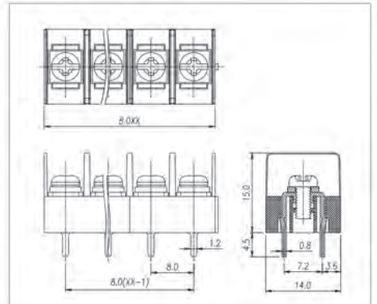

MODEL:JL45X

认证/CERTIFICATION		
材质及电镀		
螺丝	M4.0,, 钢 镀镍	
焊脚	黄铜, 镀锡	
塑件	PA66, UL94V-0	
电气性能		
参考标准	UL	IEC
额定电压	300V	750V
额定电流	20A	32A
使用线径	22-12AWG	4.0mm²
接触电阻	20mΩ	
绝缘电阻	500MΩ/DC500V	
耐电压	AC2000V/1Min	
机械性能		
温度范围	-40℃~+105℃	
扭矩	12.24kgf-cm/1.2Nm/10.6Lbin	

MATERIAL		
Screws	M4.0 Steel Ni plated	
Pin Herder	Brass, Sn plated	
Housing	PA66, UL94V-0	
ELECTRICAL		
Standard	UL	IEC
Rated voltage	300V	750V
Rated current	20A	32A
Wire range	22-12AWG	4.0mm²
Contact Resistance	20mΩ	
Insulation resistance	500MΩ/DC500V	
Withstanding voltage	AC2000V/1Min	
MECHANICAL		
Temp. range	-40℃~+105℃	
Torque	12.24kgf-cm/1.2Nm/10.6Lbin	

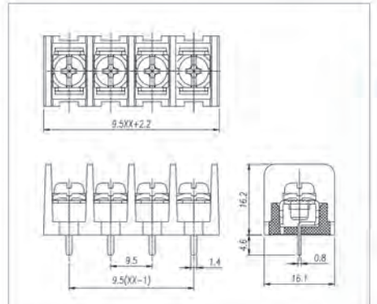

Pitch:9.5mm

MODEL:JL48R

认证/CERTIFICATION

材质及电镀		
螺丝	M4.0, 钢 镀镍	
焊脚	黄铜, 镀锡	
塑件	PA66, UL94V-0	
电气性能		
参考标准	UL	IEC
额定电压	300V	750V
额定电流	20A	32A
使用线径	22-12AWG	4.0mm²
接触电阻	20mΩ	
绝缘电阻	500MΩ/DC500V	
耐电压	AC2000V/1Min	
机械性能		
温度范围	-40℃~+105℃	
扭矩	12.24kgf-cm/1.2Nm/10.6Lbin	

MATERIAL		
Screws	M4.0 Steel Ni plated	
Pin Herder	Brass, Sn plated	
Housing	PA66, UL94V-0	
ELECTRICAL		
Standard	UL	IEC
Rated voltage	300V	750V
Rated current	20A	32A
Wire range	22-12AWG	4.0mm²
Contact Resistance	20mΩ	
Insulation resistance	500MΩ/DC500V	
Withstanding voltage	AC2000V/1Min	
MECHANICAL		
Temp. range	-40℃~+105℃	
Torque	12.24kgf-cm/1.2Nm/10.6Lbin	

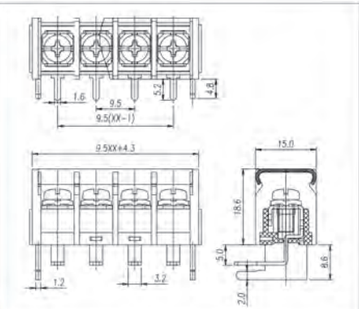

Pitch:9.5mm

MODEL:JL49M

认证/CERTIFICATION

材质及电镀		
螺丝	M3.5, 钢 镀镍	
焊脚	黄铜, 镀锡	
塑件	PA66, UL94V-0	
电气性能		
参考标准	UL	IEC
额定电压	300V	750V
额定电流	20A	32A
使用线径	22-12AWG	4.0mm²
接触电阻	20mΩ	
绝缘电阻	500MΩ/DC500V	
耐电压	AC2000V/1Min	
机械性能		
温度范围	-40℃~+105℃	
扭矩	8.16kgf-cm/0.8Nm/7.0Lbin	

MATERIAL		
Screws	M3.5 Steel Ni plated	
Pin Herder	Brass, Sn plated	
Housing	PA66, UL94V-0	
ELECTRICAL		
Standard	UL	IEC
Rated voltage	300V	750V
Rated current	20A	32A
Wire range	22-12AWG	4.0mm²
Contact Resistance	20mΩ	
Insulation resistance	500MΩ/DC500V	
Withstanding voltage	AC2000V/1Min	
MECHANICAL		
Temp. range	-40℃~+105℃	
Torque	8.16kgf-cm/0.8Nm/7.0Lbin	

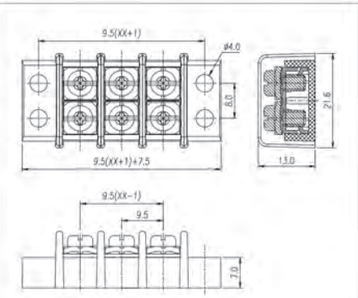

Pitch:7.62mm

MODEL:JL24-1

认证/CERTIFICATION

材质及电镀		
螺丝	M3.0, 钢 镀镍	
焊脚	黄铜, 镀锡	
塑件	PA66, UL94V-0	
电气性能		
参考标准	UL	IEC
额定电压	300V	450V
额定电流	15A	24A
使用线径	22-14AWG	2.5mm²
接触电阻	20mΩ	
绝缘电阻	500MΩ/DC500V	
耐电压	AC2000V/1Min	
机械性能		
温度范围	-40℃~+105℃	
扭矩	5.10kgf-cm/0.5Nm/4.43Lbin	

MATERIAL		
Screws	M3.0 Steel Ni plated	
Pin Herder	Brass, Sn plated	
Housing	PA66, UL94V-0	
ELECTRICAL		
Standard	UL	IEC
Rated voltage	300V	450V
Rated current	15A	24A
Wire range	22-14AWG	2.5mm²
Contact Resistance	20mΩ	
Insulation resistance	500MΩ/DC500V	
Withstanding voltage	AC2000V/1Min	
MECHANICAL		
Temp. range	-40℃~+105℃	
Torque	5.10kgf-cm/0.5Nm/4.43Lbin	

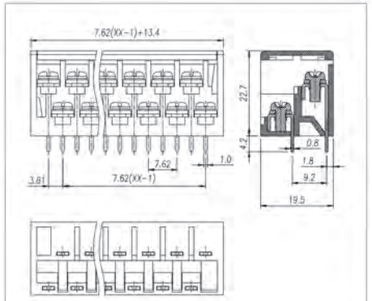

Pitch:7.62mm

MODEL:JL24-2

认证/CERTIFICATION

材质及电镀		
螺丝	M3.0, 钢 镀镍	
焊脚	黄铜, 镀锡	
塑件	PA66, UL94V-0	
电气性能		
参考标准	UL	IEC
额定电压	300V	450V
额定电流	15A	24A
使用线径	22-14AWG	2.5mm²
接触电阻	20mΩ	
绝缘电阻	500MΩ/DC500V	
耐电压	AC2000V/1Min	
机械性能		
温度范围	-40℃~+105℃	
扭矩	5.10kgf-cm/0.5Nm/4.43Lbin	

MATERIAL		
Screws	M3.0 Steel Ni plated	
Pin Herder	Brass, Sn plated	
Housing	PA66, UL94V-0	
ELECTRICAL		
Standard	UL	IEC
Rated voltage	300V	450V
Rated current	15A	24A
Wire range	22-14AWG	2.5mm²
Contact Resistance	20mΩ	
Insulation resistance	500MΩ/DC500V	
Withstanding voltage	AC2000V/1Min	
MECHANICAL		
Temp. range	-40℃~+105℃	
Torque	5.10kgf-cm/0.5Nm/4.43Lbin	

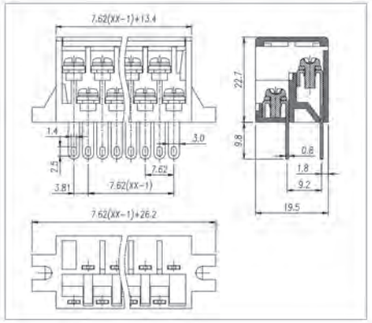

Pitch:7.62mm

MODEL:JLX7620

认证/CERTIFICATION

材质及电镀		
螺丝	M3.0, 钢 镀镍	
焊脚	黄铜, 镀锡	
塑件	PA66, UL94V-0	
电气性能		
参考标准	UL	IEC
额定电压	300V	450V
额定电流	10A	17.5A
使用线径	22-16AWG	1.5mm²
接触电阻	20mΩ	
绝缘电阻	500MΩ/DC500V	
耐电压	AC2000V/1Min	
机械性能		
温度范围	-40℃~+105℃	
扭矩	5.10kgf-cm/0.5Nm/4.43Lbin	

MATERIAL		
Screws	M3.0 Steel Ni plated	
Pin Herder	Brass, Sn plated	
Housing	PA66, UL94V-0	
ELECTRICAL		
Standard	UL	IEC
Rated voltage	300V	450V
Rated current	10A	17.5A
Wire range	22-16AWG	1.5mm²
Contact Resistance	20mΩ	
Insulation resistance	500MΩ/DC500V	
Withstanding voltage	AC2000V/1Min	
MECHANICAL		
Temp. range	-40℃~+105℃	
Torque	5.10kgf-cm/0.5Nm/4.43Lbin	

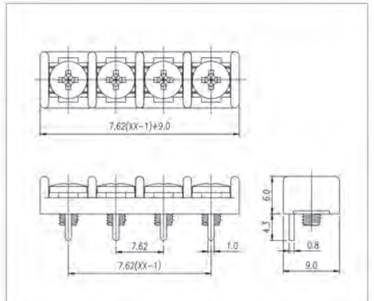

Pitch:7.62mm

MODEL:JL7620

认证/CERTIFICATION

材质及电镀		
螺丝	M3.0, 钢 镀镍	
焊脚	黄铜, 镀锡	
塑件	PA66, UL94V-0	
电气性能		
参考标准	UL	IEC
额定电压	300V	450V
额定电流	10A	17.5A
使用线径	22-16AWG	1.5mm²
接触电阻	20mΩ	
绝缘电阻	500MΩ/DC500V	
耐电压	AC2000V/1Min	
机械性能		
温度范围	-40℃~+105℃	
扭矩	5.10kgf-cm/0.5Nm/4.43Lbin	

MATERIAL		
Screws	M3.0 Steel Ni plated	
Pin Herder	Brass, Sn plated	
Housing	PA66, UL94V-0	
ELECTRICAL		
Standard	UL	IEC
Rated voltage	300V	450V
Rated current	10A	17.5A
Wire range	22-16AWG	1.5mm²
Contact Resistance	20mΩ	
Insulation resistance	500MΩ/DC500V	
Withstanding voltage	AC2000V/1Min	
MECHANICAL		
Temp. range	-40℃~+105℃	
Torque	5.10kgf-cm/0.5Nm/4.43Lbin	

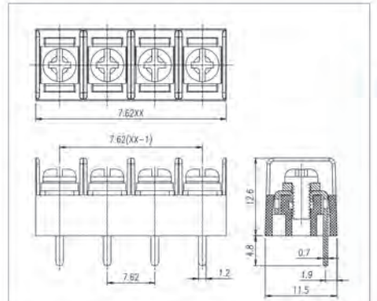

MODEL:JL7620H

认证/CERTIFICATION	CQC
材质及电镀	
螺丝	M3.0, 钢 镀镍
焊脚	黄铜, 镀锡
塑件	PA66, UL94V-0
电气性能	
参考标准	UL / IEC
额定电压	300V / 450V
额定电流	10A / 17.5A
使用线径	22-16AWG / 1.5mm²
接触电阻	20mΩ
绝缘电阻	500MΩ/DC500V
耐电压	AC2000V/1Min
机械性能	
温度范围	-40℃~+105℃
扭矩	5.10kgf-cm/0.5Nm/4.43Lbin

MATERIAL	
Screws	M3.0 Steel Ni plated
Pin Herder	Brass, Sn plated
Housing	PA66, UL94V-0
ELECTRICAL	
Standard	UL / IEC
Rated voltage	300V / 450V
Rated current	10A / 17.5A
Wire range	22-16AWG / 1.5mm²
Contact Resistance	20mΩ
Insulation resistance	500MΩ/DC500V
Withstanding voltage	AC2000V/1Min
MECHANICAL	
Temp. range	-40℃~+105℃
Torque	5.10kgf-cm/0.5Nm/4.43Lbin

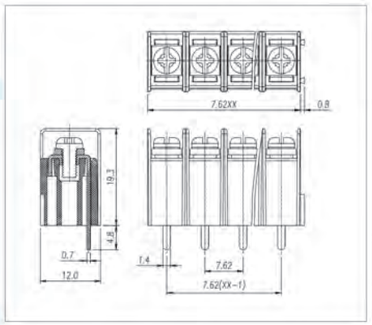

MODEL:JL7620A

认证/CERTIFICATION	CQC
材质及电镀	
螺丝	M3.0, 钢 镀镍
焊脚	黄铜, 镀锡
塑件	PA66, UL94V-0
电气性能	
参考标准	UL / IEC
额定电压	300V / 450V
额定电流	10A / 17.5A
使用线径	22-16AWG / 1.5mm²
接触电阻	20mΩ
绝缘电阻	500MΩ/DC500V
耐电压	AC2000V/1Min
机械性能	
温度范围	-40℃~+105℃
扭矩	5.10kgf-cm/0.5Nm/4.43Lbin

MATERIAL	
Screws	M3.0 Steel Ni plated
Pin Herder	Brass, Sn plated
Housing	PA66, UL94V-0
ELECTRICAL	
Standard	UL / IEC
Rated voltage	300V / 450V
Rated current	10A / 17.5A
Wire range	22-16AWG / 1.5mm²
Contact Resistance	20mΩ
Insulation resistance	500MΩ/DC500V
Withstanding voltage	AC2000V/1Min
MECHANICAL	
Temp. range	-40℃~+105℃
Torque	5.10kgf-cm/0.5Nm/4.43Lbin

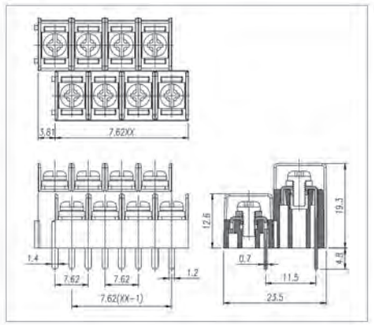

MODEL:JL7620B

认证/CERTIFICATION	CQC
材质及电镀	
螺丝	M3.0, 钢 镀镍
焊脚	黄铜, 镀锡
塑件	PA66, UL94V-0
电气性能	
参考标准	UL / IEC
额定电压	300V / 450V
额定电流	10A / 17.5A
使用线径	22-16AWG / 1.5mm²
接触电阻	20mΩ
绝缘电阻	500MΩ/DC500V
耐电压	AC2000V/1Min
机械性能	
温度范围	-40℃~+105℃
扭矩	5.10kgf-cm/0.5Nm/4.43Lbin

MATERIAL	
Screws	M3.0 Steel Ni plated
Pin Herder	Brass, Sn plated
Housing	PA66, UL94V-0
ELECTRICAL	
Standard	UL / IEC
Rated voltage	300V / 450V
Rated current	10A / 17.5A
Wire range	22-16AWG / 1.5mm²
Contact Resistance	20mΩ
Insulation resistance	500MΩ/DC500V
Withstanding voltage	AC2000V/1Min
MECHANICAL	
Temp. range	-40℃~+105℃
Torque	5.10kgf-cm/0.5Nm/4.43Lbin

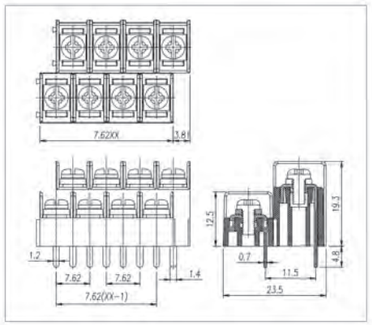

MODEL:JL8500

认证/CERTIFICATION	CQC
材质及电镀	
螺丝	M3.0, 钢 镀镍
焊脚	黄铜, 镀锡
塑件	PA66, UL94V-0
电气性能	
参考标准	UL / IEC
额定电压	300V / 450V
额定电流	10A / 17.5A
使用线径	22-16AWG / 1.5mm²
接触电阻	20mΩ
绝缘电阻	500MΩ/DC500V
耐电压	AC2000V/1Min
机械性能	
温度范围	-40℃~+105℃
扭矩	5.10kgf-cm/0.5Nm/4.43Lbin

MATERIAL	
Screws	M3.0 Steel Ni plated
Pin Herder	Brass, Sn plated
Housing	PA66, UL94V-0
ELECTRICAL	
Standard	UL / IEC
Rated voltage	300V / 450V
Rated current	10A / 17.5A
Wire range	22-16AWG / 1.5mm²
Contact Resistance	20mΩ
Insulation resistance	500MΩ/DC500V
Withstanding voltage	AC2000V/1Min
MECHANICAL	
Temp. range	-40℃~+105℃
Torque	5.10kgf-cm/0.5Nm/4.43Lbin

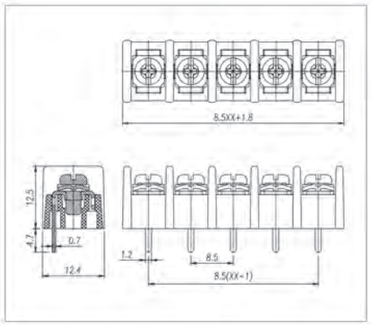

MODEL:JL8500

认证/CERTIFICATION	CQC
材质及电镀	
螺丝	M3.0, 钢 镀镍
焊脚	黄铜, 镀锡
塑件	PA66, UL94V-0
电气性能	
参考标准	UL / IEC
额定电压	300V / 450V
额定电流	10A / 17.5A
使用线径	22-16AWG / 1.5mm²
接触电阻	20mΩ
绝缘电阻	500MΩ/DC500V
耐电压	AC2000V/1Min
机械性能	
温度范围	-40℃~+105℃
扭矩	5.10kgf-cm/0.5Nm/4.43Lbin

MATERIAL	
Screws	M3.0 Steel Ni plated
Pin Herder	Brass, Sn plated
Housing	PA66, UL94V-0
ELECTRICAL	
Standard	UL / IEC
Rated voltage	300V / 450V
Rated current	10A / 17.5A
Wire range	22-16AWG / 1.5mm²
Contact Resistance	20mΩ
Insulation resistance	500MΩ/DC500V
Withstanding voltage	AC2000V/1Min
MECHANICAL	
Temp. range	-40℃~+105℃
Torque	5.10kgf-cm/0.5Nm/4.43Lbin

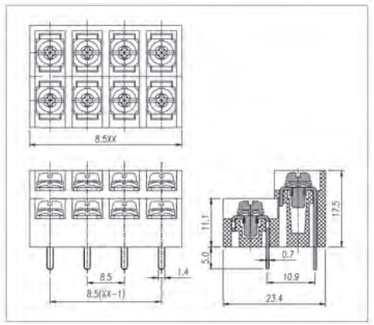

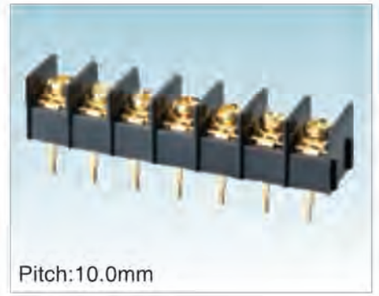

MODEL:JL10

认证/CERTIFICATION	CQC
材质及电镀	
螺丝	M4.0, 钢 镀镍
焊脚	黄铜, 镀锡
塑件	PA66, UL94V-0
电气性能	
参考标准	UL / IEC
额定电压	300V / 450V
额定电流	20A / 32A
使用线径	22-12AWG / 4.0mm²
接触电阻	20mΩ
绝缘电阻	500MΩ/DC500V
耐电压	AC2000V/1Min
机械性能	
温度范围	-40℃~+105℃
扭矩	12.24kgf-cm/1.2Nm/10.6Lbin

MATERIAL	
Screws	M4.0 Steel Ni plated
Pin Herder	Brass, Sn plated
Housing	PA66, UL94V-0
ELECTRICAL	
Standard	UL / IEC
Rated voltage	300V / 450V
Rated current	20A / 32A
Wire range	22-12AWG / 4.0mm²
Contact Resistance	20mΩ
Insulation resistance	500MΩ/DC500V
Withstanding voltage	AC2000V/1Min
MECHANICAL	
Temp. range	-40℃~+105℃
Torque	12.24kgf-cm/1.2Nm/4.0Lbin

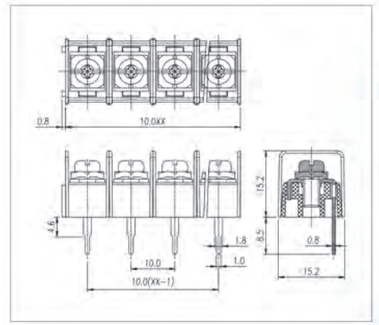

MODEL:JL-1

认证/CERTIFICATION		
材质及电镀		
螺丝	M4.0, 钢 镀镍	
焊脚	黄铜, 镀锡	
塑件	PA66, UL94V-0	
电气性能		
参考标准	UL	IEC
额定电压	300V	450V
额定电流	25A	32A
使用线径	22-12AWG	4.0mm²
接触电阻	20mΩ	
绝缘电阻	500MΩ/DC500V	
耐电压	AC2000V/1Min	
机械性能		
温度范围	-40℃~+105℃	
扭矩	12.24kgf-cm/1.2Nm/10.6Lbin	

MATERIAL		
Screws	M4.0 Steel Ni plated	
Pin Herder	Brass, Sn plated	
Housing	PA66, UL94V-0	
ELECTRICAL		
Standard	UL	IEC
Rated voltage	300V	450V
Rated current	25A	32A
Wire range	22-12AWG	4.0mm²
Contact Resistance	20mΩ	
Insulation resistance	500MΩ/DC500V	
Withstanding voltage	AC2000V/1Min	
MECHANICAL		
Temp. range	-40℃~+105℃	
Torque	12.24kgf-cm/1.2Nm/4.0Lbin	

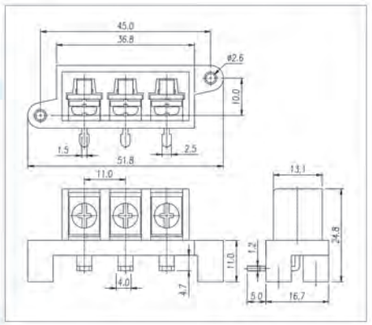

MODEL:JL-1A

认证/CERTIFICATION		
材质及电镀		
螺丝	M4.0, 钢 镀镍	
焊脚	黄铜, 镀锡	
塑件	PA66, UL94V-0	
电气性能		
参考标准	UL	IEC
额定电压	300V	450V
额定电流	25A	32A
使用线径	22-12AWG	4.0mm²
接触电阻	20mΩ	
绝缘电阻	500MΩ/DC500V	
耐电压	AC2000V/1Min	
机械性能		
温度范围	-40℃~+105℃	
扭矩	12.24kgf-cm/1.2Nm/10.6Lbin	

MATERIAL		
Screws	M4.0 Steel Ni plated	
Pin Herder	Brass, Sn plated	
Housing	PA66, UL94V-0	
ELECTRICAL		
Standard	UL	IEC
Rated voltage	300V	450V
Rated current	25A	32A
Wire range	22-12AWG	4.0mm²
Contact Resistance	20mΩ	
Insulation resistance	500MΩ/DC500V	
Withstanding voltage	AC2000V/1Min	
MECHANICAL		
Temp. range	-40℃~+105℃	
Torque	12.24kgf-cm/1.2Nm/4.0Lbin	

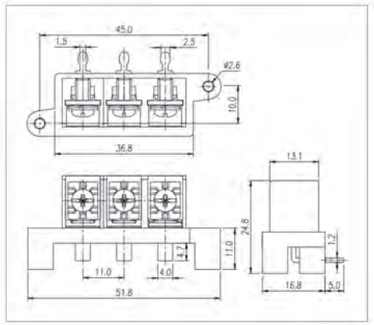

MODEL:JL-2

认证/CERTIFICATION		
材质及电镀		
螺丝	M4.0, 钢 镀镍	
焊脚	黄铜, 镀锡	
塑件	PA66, UL94V-0	
电气性能		
参考标准	UL	IEC
额定电压	300V	450V
额定电流	25A	32A
使用线径	22-12AWG	4.0mm²
接触电阻	20mΩ	
绝缘电阻	500MΩ/DC500V	
耐电压	AC2000V/1Min	
机械性能		
温度范围	-40℃~+105℃	
扭矩	12.24kgf-cm/1.2Nm/10.6Lbin	

MATERIAL		
Screws	M4.0 Steel Ni plated	
Pin Herder	Brass, Sn plated	
Housing	PA66, UL94V-0	
ELECTRICAL		
Standard	UL	IEC
Rated voltage	300V	450V
Rated current	25A	32A
Wire range	22-12AWG	4.0mm²
Contact Resistance	20mΩ	
Insulation resistance	500MΩ/DC500V	
Withstanding voltage	AC2000V/1Min	
MECHANICAL		
Temp. range	-40℃~+105℃	
Torque	12.24kgf-cm/1.2Nm/4.0Lbin	

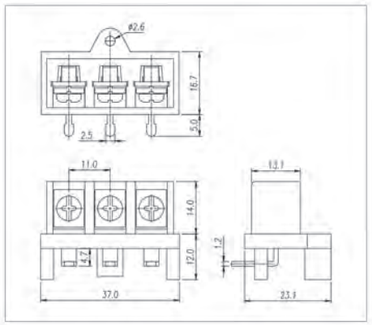

MODEL:JL-2A

认证/CERTIFICATION		
材质及电镀		
螺丝	M4.0, 钢 镀镍	
焊脚	黄铜, 镀锡	
塑件	PA66, UL94V-0	
电气性能		
参考标准	UL	IEC
额定电压	300V	450V
额定电流	25A	32A
使用线径	22-12AWG	4.0mm²
接触电阻	20mΩ	
绝缘电阻	500MΩ/DC500V	
耐电压	AC2000V/1Min	
机械性能		
温度范围	-40℃~+105℃	
扭矩	12.24kgf-cm/1.2Nm/10.6Lbin	

MATERIAL		
Screws	M4.0 Steel Ni plated	
Pin Herder	Brass, Sn plated	
Housing	PA66, UL94V-0	
ELECTRICAL		
Standard	UL	IEC
Rated voltage	300V	450V
Rated current	25A	32A
Wire range	22-12AWG	4.0mm²
Contact Resistance	20mΩ	
Insulation resistance	500MΩ/DC500V	
Withstanding voltage	AC2000V/1Min	
MECHANICAL		
Temp. range	-40℃~+105℃	
Torque	12.24kgf-cm/1.2Nm/4.0Lbin	

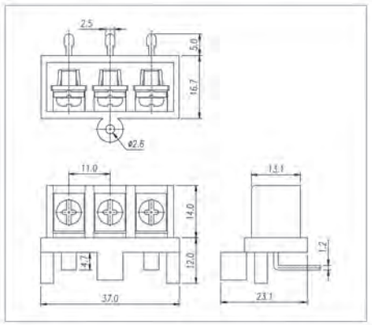

MODEL:JL-3

认证/CERTIFICATION		
材质及电镀		
螺丝	M4.0, 钢 镀镍	
焊脚	黄铜, 镀锡	
塑件	PA66, UL94V-0	
电气性能		
参考标准	UL	IEC
额定电压	300V	450V
额定电流	30A	35A
使用线径	22-10AWG	6.0mm²
接触电阻	20mΩ	
绝缘电阻	500MΩ/DC500V	
耐电压	AC2000V/1Min	
机械性能		
温度范围	-40℃~+105℃	
扭矩	12.24kgf-cm/1.2Nm/10.6Lbin	

MATERIAL		
Screws	M4.0 Steel Ni plated	
Pin Herder	Brass, Sn plated	
Housing	PA66, UL94V-0	
ELECTRICAL		
Standard	UL	IEC
Rated voltage	300V	450V
Rated current	30A	35A
Wire range	22-10AWG	6.0mm²
Contact Resistance	20mΩ	
Insulation resistance	500MΩ/DC500V	
Withstanding voltage	AC2000V/1Min	
MECHANICAL		
Temp. range	-40℃~+105℃	
Torque	12.24kgf-cm/1.2Nm/4.0Lbin	

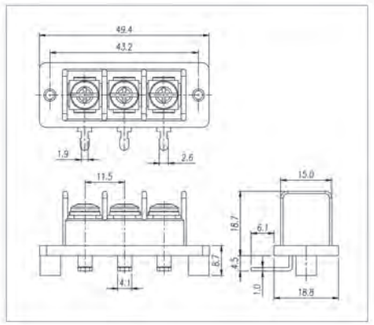

MODEL:JL-4

认证/CERTIFICATION		
材质及电镀		
螺丝	M3.0, 钢 镀镍	
焊脚	黄铜, 镀锡	
塑件	PA66, UL94V-0	
电气性能		
参考标准	UL	IEC
额定电压	300V	750V
额定电流	15A	24A
使用线径	22-14AWG	2.5mm²
接触电阻	20mΩ	
绝缘电阻	500MΩ/DC500V	
耐电压	AC2000V/1Min	
机械性能		
温度范围	-40℃~+105℃	
扭矩	5.10kgf-cm/0.5Nm/4.43Lbin	

MATERIAL		
Screws	M3.0 Steel Ni plated	
Pin Herder	Brass, Sn plated	
Housing	PA66, UL94V-0	
ELECTRICAL		
Standard	UL	IEC
Rated voltage	300V	450V
Rated current	15A	24A
Wire range	22-14AWG	2.5mm²
Contact Resistance	20mΩ	
Insulation resistance	500MΩ/DC500V	
Withstanding voltage	AC2000V/1Min	
MECHANICAL		
Temp. range	-40℃~+105℃	
Torque	5.10kgf-cm/0.5Nm/4.43Lbin	

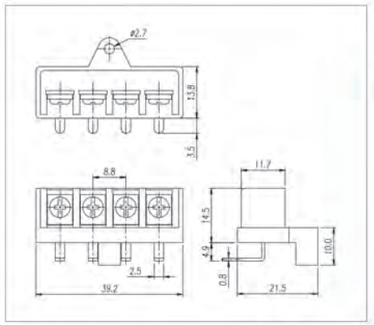

Pitch:12.5mm

MODEL:JL-5

认证/CERTIFICATION		
材质及电镀		
螺丝	M4.0, 钢 镀镍	
焊脚	黄铜, 镀锡	
塑件	PA66, UL94V-0	
电气性能		
参考标准	UL	IEC
额定电压	300V	450V
额定电流	32A	37.5A
使用线径	22-10AWG	6.0mm²
接触电阻	20mΩ	
绝缘电阻	500MΩ/DC500V	
耐电压	AC2000V/1Min	
机械性能		
温度范围	-40℃~+105℃	
扭矩	12.24kgf-cm/1.2Nm/10.6Lbin	

MATERIAL		
Screws	M4.0 Steel Ni plated	
Pin Herder	Brass, Sn plated	
Housing	PA66, UL94V-0	
ELECTRICAL		
Standard	UL	IEC
Rated voltage	300V	450V
Rated current	32A	37.5A
Wire range	22-10AWG	6.0mm²
Contact Resistance	20mΩ	
Insulation resistance	500MΩ/DC500V	
Withstanding voltage	AC2000V/1Min	
MECHANICAL		
Temp. range	-40℃~+105℃	
Torque	12.24kgf-cm/1.2Nm/4.0Lbin	

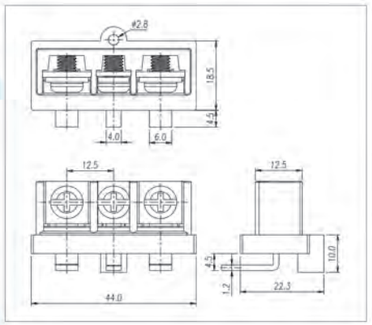

Pitch:12.5mm

MODEL:JL-51H

认证/CERTIFICATION		
材质及电镀		
螺丝	M4.0, 钢 镀镍	
焊脚	黄铜, 镀锡	
塑件	PA66, UL94V-0	
电气性能		
参考标准	UL	IEC
额定电压	300V	450V
额定电流	32A	37.5A
使用线径	22-10AWG	6.0mm²
接触电阻	20mΩ	
绝缘电阻	500MΩ/DC500V	
耐电压	AC2000V/1Min	
机械性能		
温度范围	-40℃~+105℃	
扭矩	12.24kgf-cm/1.2Nm/10.6Lbin	

MATERIAL		
Screws	M4.0 Steel Ni plated	
Pin Herder	Brass, Sn plated	
Housing	PA66, UL94V-0	
ELECTRICAL		
Standard	UL	IEC
Rated voltage	300V	450V
Rated current	32A	37.5A
Wire range	22-10AWG	6.0mm²
Contact Resistance	20mΩ	
Insulation resistance	500MΩ/DC500V	
Withstanding voltage	AC2000V/1Min	
MECHANICAL		
Temp. range	-40℃~+105℃	
Torque	12.24kgf-cm/1.2Nm/4.0Lbin	

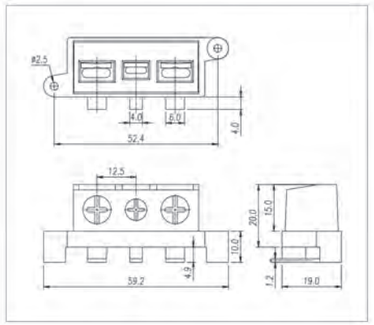

Pitch:12.5mm

MODEL:JL-52H

认证/CERTIFICATION		
材质及电镀		
螺丝	M4.0, 钢 镀镍	
焊脚	黄铜, 镀锡	
塑件	PA66, UL94V-0	
电气性能		
参考标准	UL	IEC
额定电压	300V	450V
额定电流	32A	37.5A
使用线径	22-10AWG	6.0mm²
接触电阻	20mΩ	
绝缘电阻	500MΩ/DC500V	
耐电压	AC2000V/1Min	
机械性能		
温度范围	-40℃~+105℃	
扭矩	12.24kgf-cm/1.2Nm/10.6Lbin	

MATERIAL		
Screws	M4.0 Steel Ni plated	
Pin Herder	Brass, Sn plated	
Housing	PA66, UL94V-0	
ELECTRICAL		
Standard	UL	IEC
Rated voltage	300V	450V
Rated current	32A	37.5A
Wire range	22-10AWG	6.0mm²
Contact Resistance	20mΩ	
Insulation resistance	500MΩ/DC500V	
Withstanding voltage	AC2000V/1Min	
MECHANICAL		
Temp. range	-40℃~+105℃	
Torque	12.24kgf-cm/1.2Nm/4.0Lbin	

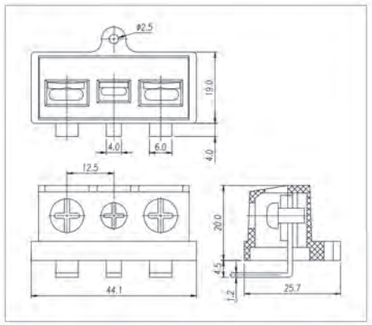

Pitch:11.0mm

MODEL:JL-1H

认证/CERTIFICATION		
材质及电镀		
螺丝	M4.0, 钢 镀镍	
焊脚	黄铜, 镀锡	
塑件	PA66, UL94V-0	
电气性能		
参考标准	UL	IEC
额定电压	300V	750V
额定电流	25A	32A
使用线径	22-12AWG	4.0mm²
接触电阻	20mΩ	
绝缘电阻	500MΩ/DC500V	
耐电压	AC2000V/1Min	
机械性能		
温度范围	-40℃~+105℃	
扭矩	12.24kgf-cm/1.2Nm/10.6Lbin	

MATERIAL		
Screws	M4.0 Steel Ni plated	
Pin Herder	Brass, Sn plated	
Housing	PA66, UL94V-0	
ELECTRICAL		
Standard	UL	IEC
Rated voltage	300V	750V
Rated current	25A	32A
Wire range	22-12AWG	4.0mm²
Contact Resistance	20mΩ	
Insulation resistance	500MΩ/DC500V	
Withstanding voltage	AC2000V/1Min	
MECHANICAL		
Temp. range	-40℃~+105℃	
Torque	12.24kgf-cm/1.2Nm/4.0Lbin	

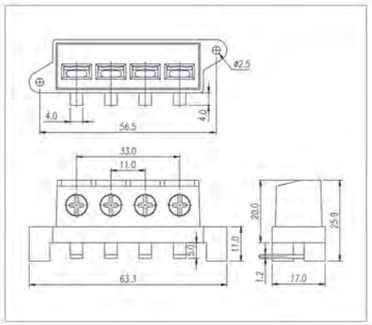

Pitch:11.0mm

MODEL:JL-2H

认证/CERTIFICATION		
材质及电镀		
螺丝	M4.0, 钢 镀镍	
焊脚	黄铜, 镀锡	
塑件	PA66, UL94V-0	
电气性能		
参考标准	UL	IEC
额定电压	300V	750V
额定电流	25A	32A
使用线径	22-12AWG	4.0mm²
接触电阻	20mΩ	
绝缘电阻	500MΩ/DC500V	
耐电压	AC2000V/1Min	
机械性能		
温度范围	-40℃~+105℃	
扭矩	12.24kgf-cm/1.2Nm/10.6Lbin	

MATERIAL		
Screws	M4.0 Steel Ni plated	
Pin Herder	Brass, Sn plated	
Housing	PA66, UL94V-0	
ELECTRICAL		
Standard	UL	IEC
Rated voltage	300V	750V
Rated current	25A	32A
Wire range	22-12AWG	4.0mm²
Contact Resistance	20mΩ	
Insulation resistance	500MΩ/DC500V	
Withstanding voltage	AC2000V/1Min	
MECHANICAL		
Temp. range	-40℃~+105℃	
Torque	12.24kgf-cm/1.2Nm/4.0Lbin	

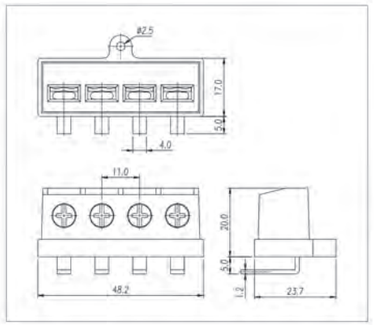

Pitch:11.0mm

MODEL:JLT-2

认证/CERTIFICATION		
材质及电镀		
螺丝	M4.0, 钢 镀镍	
焊脚	黄铜, 镀锡	
塑件	PA66, UL94V-0	
电气性能		
参考标准	UL	IEC
额定电压	300V	750V
额定电流	30A	35A
使用线径	22-12AWG	4.0mm²
接触电阻	20mΩ	
绝缘电阻	500MΩ/DC500V	
耐电压	AC2000V/1Min	
机械性能		
温度范围	-40℃~+105℃	
扭矩	12.24kgf-cm/1.2Nm/10.6Lbin	

MATERIAL		
Screws	M4.0 Steel Ni plated	
Pin Herder	Brass, Sn plated	
Housing	PA66, UL94V-0	
ELECTRICAL		
Standard	UL	IEC
Rated voltage	300V	750V
Rated current	30A	35A
Wire range	22-12AWG	4.0mm²
Contact Resistance	20mΩ	
Insulation resistance	500MΩ/DC500V	
Withstanding voltage	AC2000V/1Min	
MECHANICAL		
Temp. range	-40℃~+105℃	
Torque	12.24kgf-cm/1.2Nm/4.0Lbin	

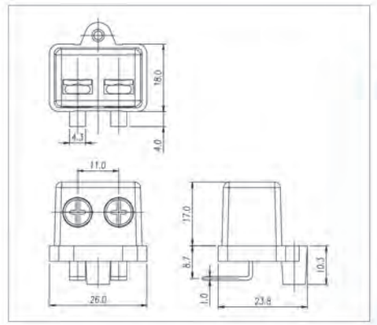

Pitch:12.65mm

MODEL:JLT-3

认证/CERTIFICATION

材质及电镀		
螺丝	M4.0, 钢 镀镍	
焊脚	黄铜, 镀锡	
塑件	PA66, UL94V-0	
电气性能		
参考标准	UL	IEC
额定电压	300V	750V
额定电流	32A	37.5A
使用线径	22-10AWG	6.0mm²
接触电阻	20mΩ	
绝缘电阻	500MΩ/DC500V	
耐电压	AC2000V/1Min	
机械性能		
温度范围	-40℃~+105℃	
扭矩	12.24kgf-cm/1.2Nm/10.6Lbin	

MATERIAL		
Screws	M4.0 Steel Ni plated	
Pin Herder	Brass, Sn plated	
Housing	PA66, UL94V-0	
ELECTRICAL		
Standard	UL	IEC
Rated voltage	300V	750V
Rated current	32A	37.5A
Wire range	22-10AWG	6.0mm²
Contact Resistance	20mΩ	
Insulation resistance	500MΩ/DC500V	
Withstanding voltage	AC2000V/1Min	
MECHANICAL		
Temp. range	-40℃~+105℃	
Torque	12.24kgf-cm/1.2Nm/4.0Lbin	

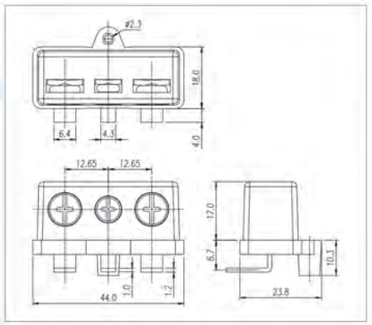

Pitch:11.0mm

MODEL:JLT-4

认证/CERTIFICATION

材质及电镀		
螺丝	M4.0, 钢 镀镍	
焊脚	黄铜, 镀锡	
塑件	PA66, UL94V-0	
电气性能		
参考标准	UL	IEC
额定电压	300V	750V
额定电流	30A	35A
使用线径	22-12AWG	4.0mm²
接触电阻	20mΩ	
绝缘电阻	500MΩ/DC500V	
耐电压	AC2000V/1Min	
机械性能		
温度范围	-40℃~+105℃	
扭矩	12.24kgf-cm/1.2Nm/10.6Lbin	

MATERIAL		
Screws	M4.0 Steel Ni plated	
Pin Herder	Brass, Sn plated	
Housing	PA66, UL94V-0	
ELECTRICAL		
Standard	UL	IEC
Rated voltage	300V	750V
Rated current	30A	35A
Wire range	22-12AWG	4.0mm²
Contact Resistance	20mΩ	
Insulation resistance	500MΩ/DC500V	
Withstanding voltage	AC2000V/1Min	
MECHANICAL		
Temp. range	-40℃~+105℃	
Torque	12.24kgf-cm/1.2Nm/4.0Lbin	

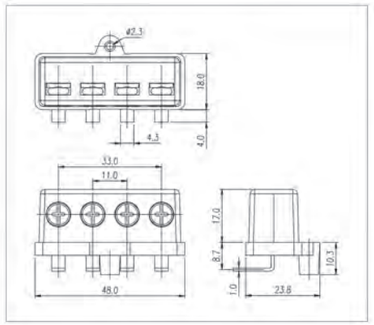

Pitch:11.0mm

MODEL:JL-21

认证/CERTIFICATION

材质及电镀		
螺丝	M4.0, 钢 镀镍	
焊脚	黄铜, 镀锡	
塑件	PA66, UL94V-0	
电气性能		
参考标准	UL	IEC
额定电压	300V	750V
额定电流	30A	35A
使用线径	22-12AWG	4.0mm²
接触电阻	20mΩ	
绝缘电阻	500MΩ/DC500V	
耐电压	AC2000V/1Min	
机械性能		
温度范围	-40℃~+105℃	
扭矩	12.24kgf-cm/1.2Nm/10.6Lbin	

MATERIAL		
Screws	M4.0 Steel Ni plated	
Pin Herder	Brass, Sn plated	
Housing	PA66, UL94V-0	
ELECTRICAL		
Standard	UL	IEC
Rated voltage	300V	750V
Rated current	30A	35A
Wire range	22-12AWG	4.0mm²
Contact Resistance	20mΩ	
Insulation resistance	500MΩ/DC500V	
Withstanding voltage	AC2000V/1Min	
MECHANICAL		
Temp. range	-40℃~+105℃	
Torque	12.24kgf-cm/1.2Nm/4.0Lbin	

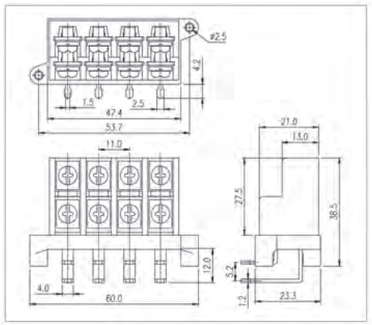

Pitch:11.0mm

MODEL:JL21A

认证/CERTIFICATION

材质及电镀		
螺丝	M4.0, 钢 镀镍	
焊脚	黄铜, 镀锡	
塑件	PA66, UL94V-0	
电气性能		
参考标准	UL	IEC
额定电压	300V	750V
额定电流	30A	35A
使用线径	22-12AWG	4.0mm²
接触电阻	20mΩ	
绝缘电阻	500MΩ/DC500V	
耐电压	AC2000V/1Min	
机械性能		
温度范围	-40℃~+105℃	
扭矩	12.24kgf-cm/1.2Nm/10.6Lbin	
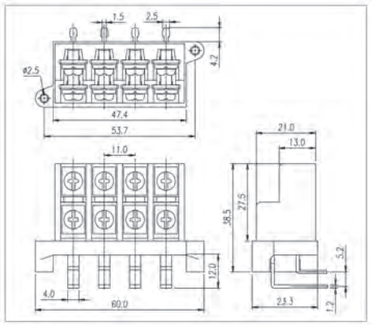
MATERIAL		
Screws	M4.0 Steel Ni plated	
Pin Herder	Brass, Sn plated	
Housing	PA66, UL94V-0	
ELECTRICAL		
Standard	UL	IEC
Rated voltage	300V	750V
Rated current	30A	35A
Wire range	22-12AWG	4.0mm²
Contact Resistance	20mΩ	
Insulation resistance	500MΩ/DC500V	
Withstanding voltage	AC2000V/1Min	
MECHANICAL		
Temp. range	-40℃~+105℃	
Torque	12.24kgf-cm/1.2Nm/4.0Lbin