Pitch:5.0/5.08mm

MODEL:JL2EDGAM

认证/CERTIFICATION	

材质及电镀		
螺母	M2.5,黄铜	
焊针	磷青铜, 镀锡	
塑件	PA66, UL94V-0	
电气性能		
参考标准	UL	IEC
额定电压	300V	450V
额定电流	15A	20A
接触电阻	20mΩ	
绝缘电阻	500MΩ/DC500V	
耐电压	AC2000V/1Min	
机械性能		
温度范围	-40℃~+105℃	
瞬时温度	+250℃ 5秒	
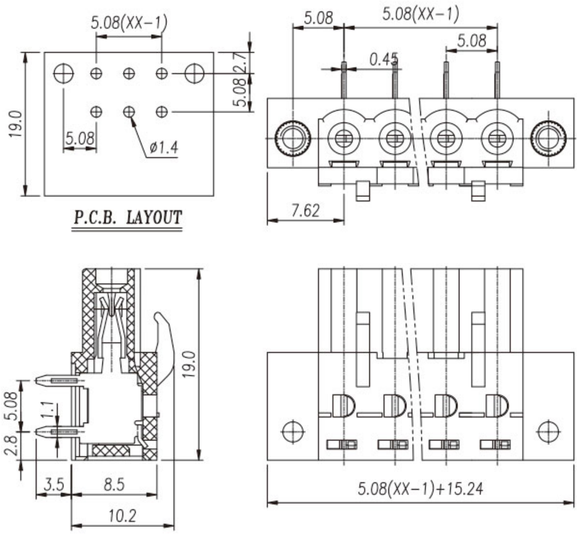
MATERIAL		
Nut	M2.5,Brass	
Pin header	Phosphor bronze, Si plated	
Housing	PA66, UL94V-0	
ELECTRICAL		
Standard	UL	IEC
Rated voltage	300V	450V
Rated current	15A	20A
Contact resistance	20mΩ	
Insulation resistance	500MΩ/DC500V	
Withstanding voltage	AC2000V/1Min	
MECHANICAL		
Temp. range	-40℃~+105℃	
Max. soldering	+250℃ for 5 Sec